Littelfuse®
Expertise Applied | Answers Delivered

INLINE MIDI® FUSE HOLDER

200A • 32V DC Max • MIDI®

Description

The Inline MIDI fuseholder is designed for use with boltdown MIDI style fuses. It may be installed direcly inline with the cables with no mounting required.

The Inline MIDI fuse holder can be used with heat shrink tubing for applications requiring more splash resistance. The curved design of the cover aids in prevention of tube-splitting during application.

Features and Benefits

- Provides high amperage, in-line, main or branch circuit protection in harsh or hazardous environments.
- Install directly inline with battery cable, no mounting required saving time and space.
- Can be used with heat shrink tubing for applications requiring more sealing and splash resistance. (sold separately)
- Curved design of the fuse holder cover aids in prevention of tube-splitting during application.
- All steel hardware is zinc-plated for long-term corrosion protection.
- Available with or without the cover to meet the needs of the installation requirements.

Specifications

Max. Voltage Rating:	32V DC
Max. Fuse Rating:	200A
Operating Temperature Range:	-40˚C to +125˚C
Max. Wire Size:	20mm^2
M5 Torque Rating:	5Nm
Base/Cover Material:	UL 94V-0 glass-filled nylon
M5 Bolt Material:	Zinc-plated
M5 Nuts:	Zinc-plated with nylock inserts

Recommended Fuse

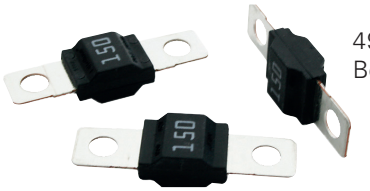

498 Series - MIDI®
Bolt-Down Fuse

Web Resources

Download 2D print, 3D model and more at:
littelfuse.com/498-IL

Ordering Information

PART NUMBER	DESCRIPTION
04980921GXM5	Assembly with hardware and cover installed (Zinc-plated steel)
498921-1	Cover only
498921-2	Base only with hardware installed (Zinc-plated steel)
498921-3	Base only, no hardware

© 2019 Littelfuse Commercial Vehicle Products
Rev: 062619

INLINE MIDI® FUSE HOLDER

Dimensions in millimeters

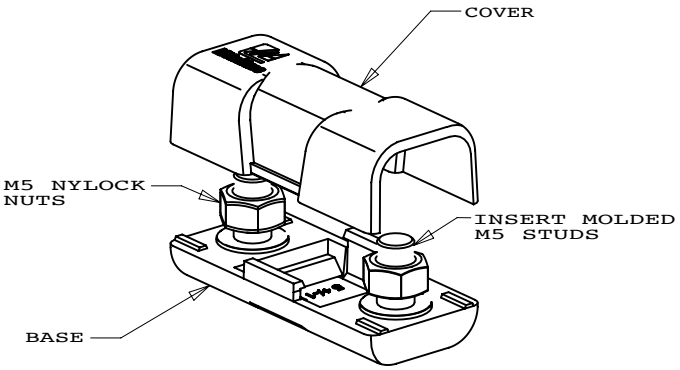

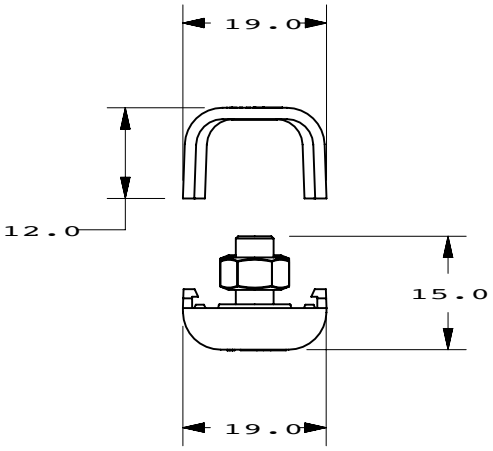

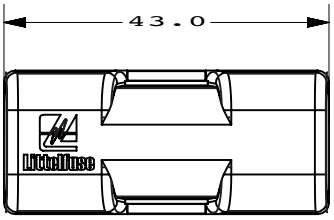

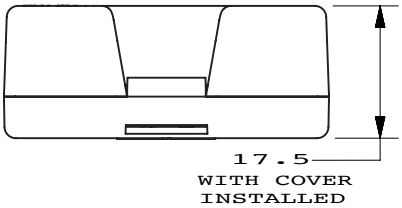

Related Products

MIDI® • 498 Series • Bolt-Down Fuses

The MIDI Fuse offers a bolt-on space saving fuse for high current wiring protection and provides time delay characteristics with Diffusion Pill Technology. The MIDI Fuse was designed and patented by Littelfuse.

Learn more at: littelfuse.com/MIDI

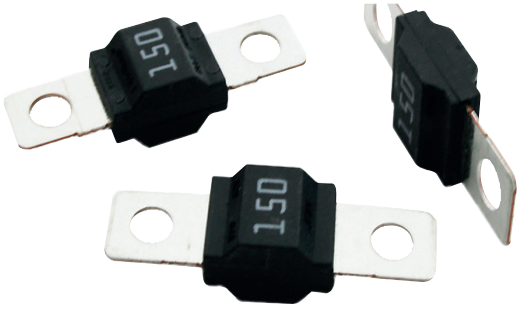

MIDI® • 498 Series • Bolt-Down Fuse Holder

Use with BF1 /MIDI fuses up to 200A. Includes protective cover. Features interconnecting pins on side of fuse block for secure multiple block configurations. Includes M5 threaded studs and hex nuts with lock washers.

Learn more at: littelfuse.com/498MIDI

Visit **Littelfuse.com** for the most up-to-date product information. Littelfuse reserves the right to make product changes, without notice. Material in this document is as accurate as known at the time of publication.

© 2019 Littelfuse Commercial Vehicle Products
Rev: 062619