Littelfuse®
Expertise Applied | Answers Delivered

460-15-100-SLD

Single-Channel Seal-Leak Detector

Description

The 460-15-100-SLD is a seal-leak detector to sense seal failures on submersible pumps. A microcontroller-based relay monitors the shaft seal of a submersible pump motor. A resistive probe is installed in the seal cavity. If water leaks into the pump, the resistance measured by the probe decreases. When the resistance drops below the sensitivity setpoint, the unit will trip and the relay contacts will change state. Output relay logic can be reversed by removing an external jumper. The unit will automatically reset when a fault is cleared.

Features & Benefits

FEATURES	BENEFITS
Unique probe protection logic	Probes are protected from scale build up through pulsed DC signal between the probes
Invertible relay logic	Allows flexibility to be used in pump-up and pump-down applications
LED status indicators	Provides visual indication of the relay status
2 relay contacts	Control independent loads on different circuits

Wiring Diagram

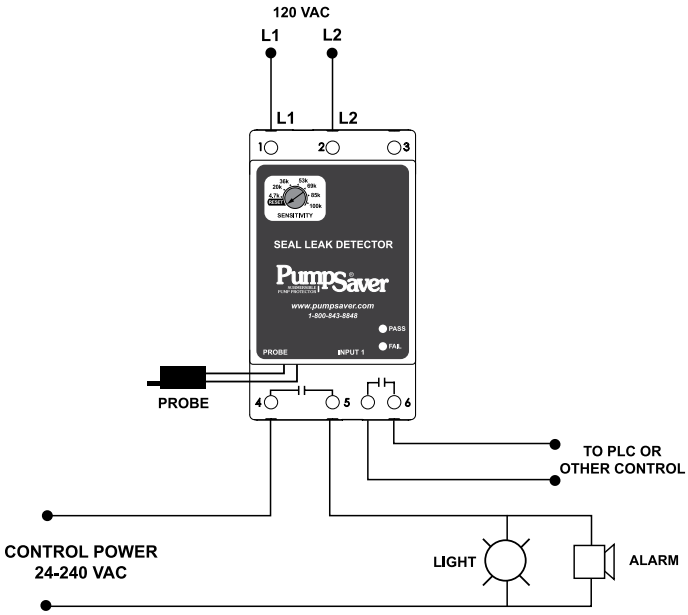

Specifications

Input Characteristics

Control Voltage	110/120VAC nominal
Frequency	50/60Hz (Note: 50Hz will increase all delay timers by 20%)

Functional Characteristics

Sensitivity	4.7k-100kΩ
Probe Sense Voltage	5vdc pulsed

Output Characteristics

Output contact Rating – (Two Form A - SPST)	
Pilot Duty	360VA @ 240VAC
General Purpose	8A @ 240VAC

General Characteristics

Ambient Temperature Range	
Operating	-40° to 70°C (-40° to 158°F)
Storage	-40° to 80°C (-40° to 176°F)
Maximum Input Power	2 W
Class of Protection	IP20, NEMA 1 (finger safe)
Relative Humidity	10-95%, non-condensing per IEC 68-2-3
Terminal Torque	4.5 in.-lbs.
Wire	AWG 12-20 AWG

Standards Passed

Electrostatic Discharge (ESD)	IEC 61000-4-2, Level 3, 6kV contact, 8kV air
Radio Frequency Immunity, Radiated	150MHz, 10 V/m
Fast Transient Burst	IEC 61000-4-4, Level 3, 3.5kV input power and controls

© 2016 Littelfuse Protection Relays & Controls

460-15-100-SLD

Surge	
IEC	IEC 61000-4-5, Level 3, 4kV line-to-line; Level 4, 4kV line-to-ground
ANSI/IEEE	C62.41 Surge and Ring Wave Compliance to a level of 6kV line-to-line
Hi-Potential Test	Meets UL508 (2 x rated V + 1000 V for 1 min.)
Safety Marks	
UL	UL508 (File #E68520)
CE	IEC 60947
Enclosure	Polycarbonate
Dimensions	**H** 88.9 mm (3.5”); **W** 52.93 mm (2.08”); **D** 59.69 mm (2.35”)
Weight	1 lb. (16 oz., 453.59 g)
Mounting Method	35mm DIN rail or Surface Mount (#6 or #8 screws)

© 2016 Littelfuse Protection Relays & Controls