Littelfuse®
Expertise Applied | Answers Delivered

111/519 Series 5mm Fuse Clips Taped for Automated Insertion

RoHS Pb

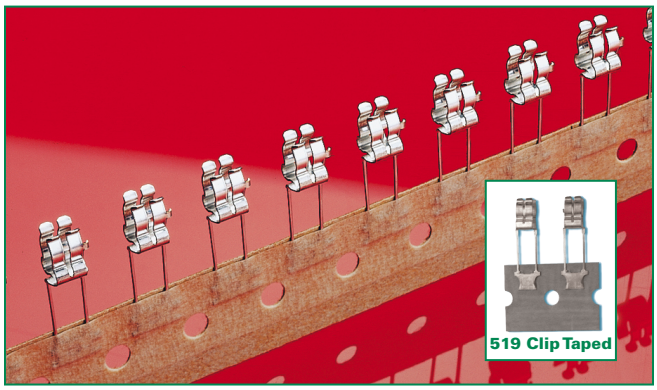

Product Characteristics

	111 Series	519 Series
Compatible Fuse Size	**5mm Diameter Fuses**	
Materials	Clip: Copper alloy Solderable, tinned	
Mounting	PC Board, 5mm pin spacing Solder pins 0.3×0.5mm	N/A
Current Level	10 Amps max	2.5 Amps

Ordering Information

Ordering PN	Clip Material	Plating	Style	Packaging Available
51900001009	Phosphor Bronze	Tin-plated	Ear	Tape/Reel (1000pcs)
01110005MR	Phosphor Bronze	Tin-plated	Ear	Ammo Pack 1000 pcs

Additional Information

Datasheet 111 Series

Resources 111 Series

Samples 111 Series

Datasheet 519 Series

Resources 519 Series

Samples 519 Series

Product Dimensions

111 Series

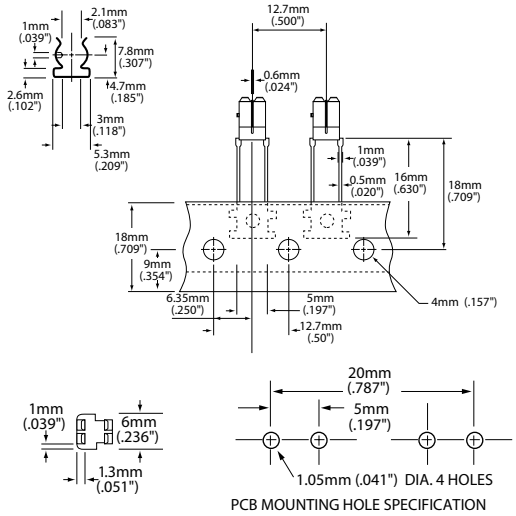

PCB MOUNTING HOLE SPECIFICATION

519 Clip Taped

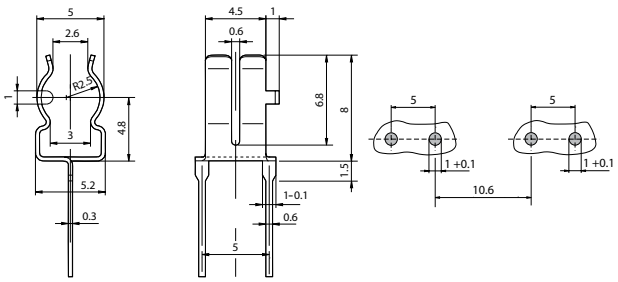

© 2015 Littelfuse, Inc.
Specifications are subject to change without notice.
Revised: 02/22/15