585 Series

Cap for Fuse Holders for 5x20mm Fuses

RoHS

585 Cap
SLOTTED TOP
FOR 5×20MM FUSE

Additional Information

Resources | Accessories | Samples

Product Characteristics

Compatible Fuse Types	5×20mm
Materials	Cap: Thermoplastic (Polyamide PA 66), UL 94 V-0, black Metal Parts: Copper alloy, corrosion protected
Electrical Data (23°C)	Rated Voltage: 250V Max. Current/Power: 6.3V / 2.5 W
Mounting	Screw Finger Grip
Protection Class & Category	IP 40 (IEC 60529)
Operating Temperature	-25 °C to 70 °C
Storage Temperature	10 °C to 60 °C
Contact Resistance	≤ 5mΩ
Dielectric Strength	3 kV, 50Hz, 1 min., dry
Insulation Resistance	> 10^3 MΩ (500 V DC, 1 min.)

Ordering Information

Description	Ordering Number	Packaging
Cap, 5×20 mm	58500000005	Bulk 100
Cap, 5x20mm	58500000015	Bulk 1000

Dimensions

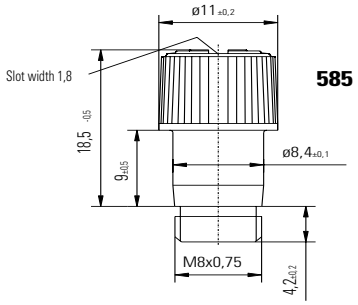

Disclaimer Notice - Information furnished is believed to be accurate and reliable. However, users should independently evaluate the suitability of and test each product selected for their own applications. Littelfuse products are not designed for, and may not be used in, all applications. Read complete Disclaimer Notice at: www.littelfuse.com/disclaimer-electronics.

© 2021 Littelfuse, Inc.
Application testing is strongly recommended. ¨cations are subject to change without notice.
Revised: GD. 05/20/21