656 Series

Molded Base PC Mount Fuse Block For 5×20mm Fuses

656 Series Holder

660 Cover
(opaque - suitable for infrared reflow soldering processes)

659 Cover
(transparent)

Additional Information

Resources 658 Series
Accessories 658 Series
Samples 658 Series
Resources 659 Series
Accessories 659 Series
Samples 659 Series
Resources 660 Series
Accessories 660 Series
Samples 660 Series

Agency Approval

Agency	Agency File Number
	40056151
	E70164

Product Characteristics

Compatible Fuse Size	5×20mm
Materials	**Holder:** Black Thermoplastic UL94 V-0
	Metal Parts: Tin plated copper alloy
Electrical Data	**Rated Voltage:** VDE 500 VAC UL 500 VAC/DC
	Rated Current: 30 A (UL)/10 A (VDE)
	Rated Power Acceptance (at ambient air temp 23 °C): - 4 W without cover - 4 W with 660 cover - 2.5 W with 659 cover
Mounting	656: Solder pins 0.4mm×1.1mm Ø 2.7mm screw hole may be used optionally
Operating Temperature	-40 °C to +85 °C
Climatic Category	40/085/21 according to IEC 60068-1
Stock Conditions	0 °C to 60 °C, at max. 70% relative humidity
Vibration Resistance	According to IEC 60068-2-6, Test Fc
Contact Resistance	<5 mΩ
Dielectric Strength	> 3 kV, 50 Hz, 1 min.
Impulse withstand Voltage	> 4 kV between life parts
Insulation Resistance	(500 V DC/1 min): >10 MΩ between live parts of different potentials
Solderability	245 °C/3 sec. according to IEC 60068-2-20, Test Ta, method 1
Soldering Heat Resistance	260 °C/10 sec. according to IEC 60068-2-20, test Tb method 1
Minimum Cross Section	Conducting path - 0.2 mm²
Torque/fixing screw	Max. 0.3 Nm

Note: If used with covers, refer to Fuseology for information on proper fuse block re-rating.

Dimensions

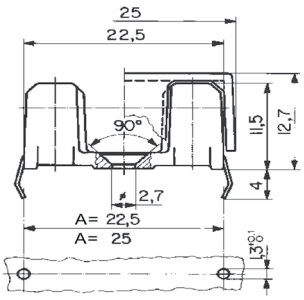

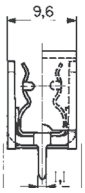

Max. dimension for removal of cover
Dimensions in Millimeters

© 2023 Littelfuse, Inc.
Specifications are subject to change without notice.
Revised: GD. 05/09/23

656 Series

Molded Base PC Mount Fuse Block For 5×20mm Fuses

Ordering Information

Part Number	Description	Packaging	Pieces	UL	VDE
65600001009	Fuse Block - "A" dimension 22.5mm 16 AMP	Bulk Pack	100	16A	10A
65600201009	Fuse Block - "A" dimension 22.5mm 20 AMP	Bulk Pack	100	20A	N/A
65600301009	Fuse Block - "A" dimension 22.5mm 30 AMP	Bulk Pack	100	30A	N/A
65600001409	Fuse Block - "A" dimension 25mm 16 AMP	Bulk Pack	100	16A	10A
65900000009	Fuse Holder Cover - Transparent plastic	Bulk Pack	100	N/A	N/A
66000001009	Fuse Holder Cover - Opaque plastic, suitable for infrared (IR) reflow soldering process	Bulk Pack	100	N/A	N/A

Re-rating Curves

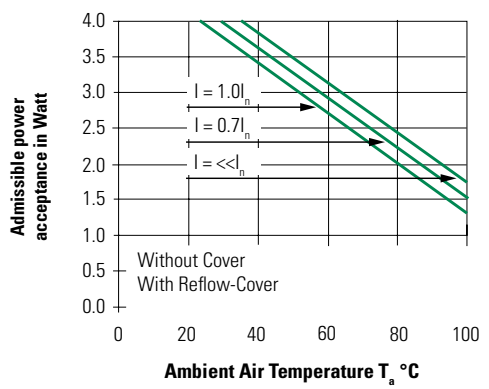

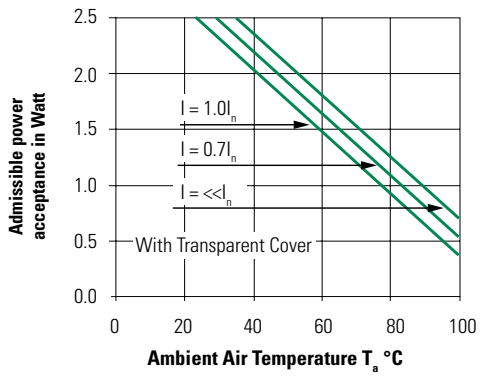

Soldering Parameters–Wave Soldering

Wave Parameter	Lead-Free Recommendation
Preheat: (Depends on Flex Activation Temperature)	(Typical Industry Recommendation)
Temperature Minimum	100 °C
Temperature Maximum	150 °C
Preheat Time	60–180 seconds
Solder Pot Temperature	260 °C Maximum
Solder Dwell Time	2–5 seconds

Recommended Hand-Solder Parameters:
Solder Iron Temperature: 350 °C +/- 5 °C
Heating Time: 5 seconds max.

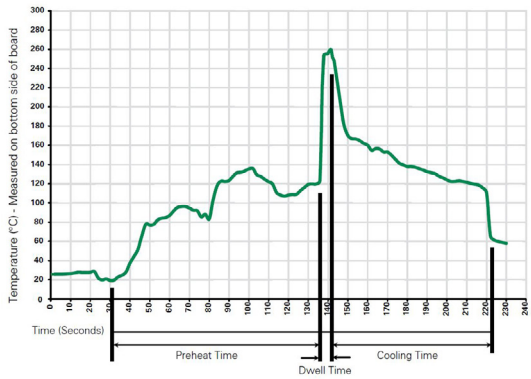

Disclaimer Notice - Information furnished is believed to be accurate and reliable. However, users should independently evaluate the suitability of and test each product selected for their own applications. Littelfuse products are not designed for, and may not be used in, all applications. Read complete Disclaimer Notice at: www.littelfuse.com/disclaimer-electronics.

© 2023 Littelfuse, Inc.
Specifications are subject to change without notice.
Revised: GD. 05/09/23