Voltage Monitoring Relays

102A Series

3-Phase Voltage/Phase Monitor

Description

The 102A series is a three-phase, auto-ranging, dual-range voltage monitor that protects 190–600 V ac, 50*/60 Hz motors regardless of size. This monitor provides a user-selectable nominal voltage setpoint and will automatically select between the 200 V and 400 V range. A unique microcontroller-based voltage and phase-sensing circuit constantly monitors the three-phase voltages to detect harmful power line conditions. When a harmful condition is detected, the output relay is deactivated after a specified trip delay. The output relay reactivates after power line conditions return to acceptable levels. The 102A monitor includes advanced, single LED diagnostics with five different light patterns that distinguish between faults and normal conditions. LED indications include normal operation, power-up restart delay, reverse-phase trip, unbalance/single-phase trip, and high- or low-voltage trip.

*Note: 50 Hz will increase all delay times by 20%.

Features & Benefits

FEATURES	BENEFITS
Proprietary microcontroller-based circuitry	Constant monitoring of single-phase, low-voltage, high-voltage (102A-9), voltage unbalance, phase reversal, harmful power line conditions
Auto-sensing wide voltage range	Automatically senses system voltage between 190–480 V ac. Saves setup time
Advanced LED diagnostics	Quick visual indicator for cause of trip
Adjustable trip delay (102A2)	Prevents nuisance tripping due to rapidly fluctuating power line conditions

Applications

- Fan motors
- Air conditioners
- Compressors
- Heat, well, and sump pumps
- Small conveyer motors

©2023 Littelfuse, Inc.
Specifications are subject to change without notice.
Revised: 07/13/2023

Specifications

Frequency	50*/60Hz
Functional Characteristics	
Low Voltage (% of setpoint)	
Trip	90%
Reset	93%
Voltage Unbalance (NEMA)	
Trip	6%
Reset	4.5%
Trip Delay Time	
Low/High Voltage	4 seconds (standard)
Unbalance & Phasing Faults	2 seconds
Restart Delay Time	
After a Fault	2 seconds (standard)
After a Complete Power Loss	2 seconds (standard)
Output Characteristics	
Output Contact Rating (SPDT - 1 Form C)	
Pilot Duty	480 VA @ 240 V ac
General Purpose	10 A @ 240 V ac
General Characteristics	
Ambient Temperature Range	
Operating	-40° to 70 °C (-40° to 158 °F)
Storage	-40° to 80 °C (-40° to 176 °F)
Trip & Reset Accuracy	±1%
Maximum Input Power	5 W
Terminal Torque	7 in.-lbs.
Wire Size	12–18AWG
Standards Passed	
Electrostatic Discharge (ESD)	IEC 61000-4-2, Level 3, 6 kV contact, 8 kV air
Fast Transient Burst	IEC 61000-4-4, Level 3, 4k V input, 2 kV input/output
Transient Protection (Internal)	IEC 61000-4-5; 1995 ±6 kV
Dimensions	**H** 74.4 mm (2.93"); **W** 133.9 mm (5.27"); **D** 74.9 mm (2.95")
Weight	1.05 lbs. (16.8 oz., 476.27 g)
Mounting Method	#8 screws

*Note: 50 Hz will increase all delay timers by 20%.

Certification & Compliance

UL	UL508 (File #E68520)
CSA	22.2 No. 14 (File #46510)
CE	IEC 60947-6-2

Ordering Information

MODEL	LINE VOLTAGE	DESCRIPTION
102A	190–480 V ac	Fixed low voltage trip delay (4 sec), fixed restart delay (2 sec)
102A2	190–480 V ac	Has variable restart delay (manual or adjustable 2–300 seconds)
102A3	190–480 V ac	Has adjustable trip delay at 2–30 seconds (unbalance and phasing trip delays remain at 2 seconds).
102A-9	190–480 V ac	Has high voltage protection. High Voltage Trip is 110% of setpoint, reset is 107% of setpoint.
102600	475–600 V ac	Fixed low voltage trip delay (4 sec), fixed restart delay (2 sec)

©2023 Littelfuse, Inc.
Specifications are subject to change without notice.
Revised: 07/13/2023

Dimensions Inches (mm)

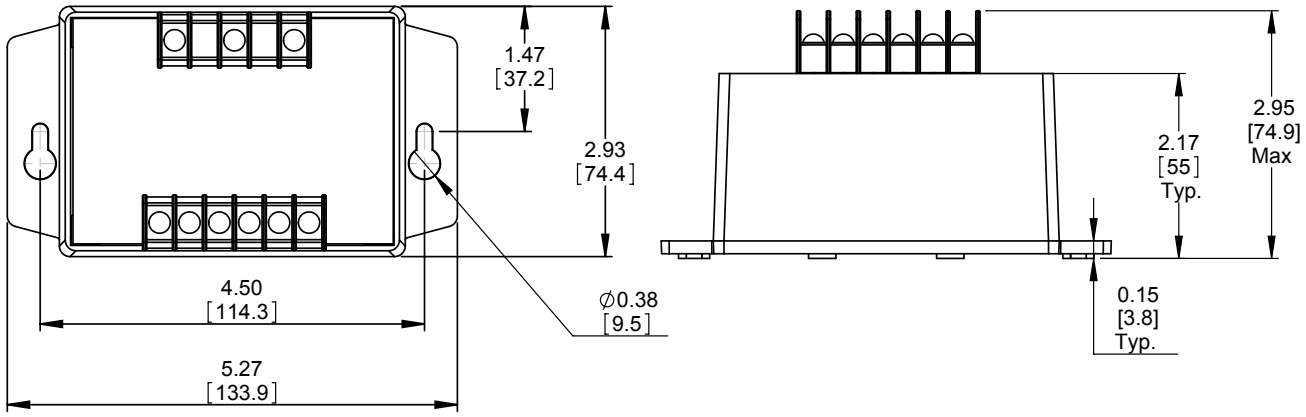

Wiring Diagram

102 WITH MOTOR CONTROL

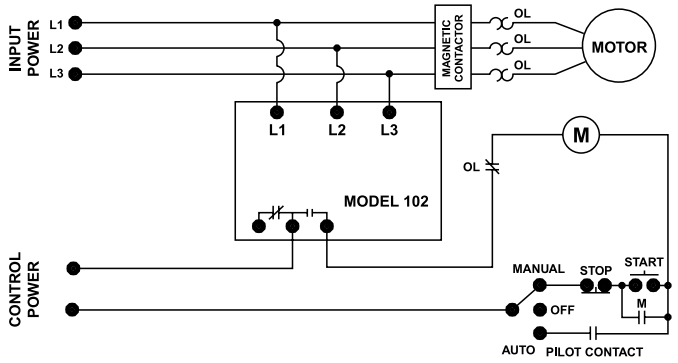

102 WITH ALARM CONTROL

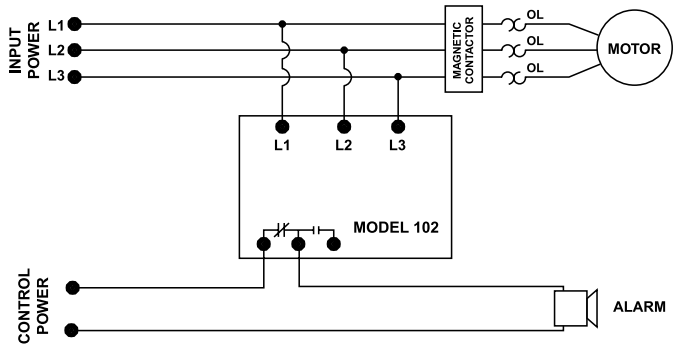

Disclaimer Notice – Information furnished is believed to be accurate and reliable. However, users should independently evaluate the suitability of and test each product selected for their own applications. Littelfuse products are not designed for, and may not be used in, all applications. Read complete Disclaimer Notice at **www.littelfuse.com/product-disclaimer.**

©2023 Littelfuse, Inc.
Specifications are subject to change without notice.
Revised: 07/13/2023