Shock Block GFCI

SB5000 Series

Industrial Shock Block for Personnel Protection

*For 32 A and 60 A only

Description

Special-Purpose Ground-Fault Circuit Interrupter (SPGFCI), Class C and Class D

The Industrial Shock Block® SB5000 series is a personnel protection device designed to meet the requirements for special-purpose GFCIs defined by UL 943C. This standard outlines GFCI classes specifically designed for use in industrial facilities. Class C GFCIs are intended to be used on three-phase systems where the line-to-line voltage is 480 V or less with a trip level of 20 mA, while Class D GFCIs are intended to be used on 600 V systems. The Industrial Shock Block includes DFT harmonic filtering, an automatic self-test feature, and is compliant to the UL 1998 Software in Programmable Components standard.

Ground-Fault Circuit Interrupter (GFCI), Class A

The Shock Block is available as a 208 V Class A GFCI, allowing commercial kitchens, construction sites, and other non-dwelling units with wet areas to meet NEC 210.8(B) for their three-phase loads up to 100 A.

Equipment Ground-Fault Protective Device (EGFPD)

Industrial Shock Block is also available with adjustable protection settings as an EGFPD. The EGFPD models can be set to trip at 6 mA or from 10–100 mA in increments of 10 mA. This offers more flexibility since GFCI devices are not allowed to have an adjustable trip level.

Ratings and Models

Industrial Shock Block (GFCI & EGFPD) is available for three-phase voltages from 208 to 600 V with a maximum full load current up to 100 A. The power system can be either solidly or high-resistance grounded, and the load must be three-phase without a neutral. The standard enclosure is IP 69K/NEMA 4X and outdoor rated, suitable for all industrial environments including high temperature washdown used in food production.

Ground Wire (Load-Ground) Monitor

The Industrial Shock Block also monitors the ground wire (load-ground) connection between the Industrial Shock Block and load. This is a required feature for Class C and D GFCI devices and is recommended for Class A GFCI and EGFPD devices. If the ground-return path is broken, the Industrial Shock Block will trip and provide an alarm by changing the state of the alarm contacts. This monitoring circuit includes an extra wire (pilot wire) between the Industrial Shock Block and load. At the load, the pilot wire is connected to a termination device. The other end of the termination device is connected to the load ground (typically the enclosure).

©2023 Littelfuse, Inc.
Specifications are subject to change without notice.
Revised: 05/01/2023

Features & Benefits

FEATURES	BENEFITS
UL 943 inverse time trip curve	Inverse time detection circuit protects people while also reducing the probability of nuisance tripping
DFT (Discrete Fourier Transform) filtering algorithm	Eliminates nuisance trips due to harmonics
Minimum trip time <20 msec	Reduces the risk of ventricular fibrillation for leakage current of 250 mA and above
Fixed 6 mA (UL 943) or 20 mA (UL 943C) trip level	UL Listed GFCI and Special-Purpose GFCI personnel protection for industrial and commercial loads up to 100 A (GFCI versions)
Selectable trip levels 6–100 mA	Settings below 20 mA provide extra safety. The settings above 20 mA can reduce nuisance tripping on systems with high-leakage current (EGFPD versions)
Two-stage ground monitor with Zener termination that meets UL 943C, CSA M421	Proactively protects from shock by tripping if continuity of ground wire between Industrial Shock Block and load is broken
Flexible configuration	Selectable manual reset or auto-reset for brownout, power-up, and ground monitor interruptions to fit plant safety protocols
Conformal coating	Internal PWB is conformally coated to protect against corrosion and moisture
Auxiliary contact	Alerts your SCADA system if the Shock Block is energized or tripped
Automatic self-test	The Shock Block will continuously test itself and will trip if there is an internal failure
GFCI Class A, C, D, and EGFPD options in one series	Simplified planning and operator familiarity for multiple applications/requirements

Applications

- For applications where people, electrical equipment, and water are present
- Agriculture
- Amusement parks
- Commercial kitchens
- Construction
- Food and beverage
- Horticultural lighting
- Maintenance shops
- Manufacturing
- Mining
- Oil and gas
- Swimming pools
- Vehicle service centers
- Wastewater facilities

Specifications

Voltage Rating	208 V, 480 V, 600 V
Current Rating	32, 60, 80, or 100 A
System Type	Three-phase, 3-wire (no neutral), 60 Hz; Single-phase, 2-wire (no neutral), 60 Hz; Single-phase, 3-wire (with neutral), 60 Hz for EGFPD versions only
Short-Circuit Current Rating	10,000 A (for SB5032 and SB5060); 50,000A (for SB5080 and SB5100)
Trip Level Settings	Fixed at 6 mA (Class A models); Fixed at 20 mA (Class C/D models) Selectable 6, 10, 20, 30, 40, 50, 60, 70, 80, 90, 100 mA (EGFPD models)
Trip Time Setting	Inverse time curve according to UL 943
Ground Monitoring Circuit	Selectable short or Zener termination; Fail-safe; CSA M421 compliant
Enclosure	IP 69K and NEMA 4X (Outdoor), Polycarbonate, Lockable
Operating Temperature	-35 °C (-31 °F) to 40 °C (104 °F), up to 66 °C (151 °F) with derating
Dimensions	**H** 285.6 mm (11.25 in.); **W** 244.4 mm (9.62 in.); **D** 119.6 mm (4.71 in.) – for 32 A and 60 A **H** 383.4 mm (15.09 in.); **W** 327.1 mm (12.88 in.); **D** 137.4 mm (5.5 in.) – for 80 A and 100 A

Accessories

- **1N5339B Termination Device:** Axial-lead ground-check termination, included with SB5000 series
- **SE-TA6 Termination Assembly:** Optional termination assembly with terminals and mounting holes
- **SE-TA6-SM Stud-Mount Termination Assembly:** Optional ground-check termination for submersible pumps
- **SE-TA6ASF-WL Series Termination Assembly:** Compact 12 W ground-check termination assembly

©2023 Littelfuse, Inc.
Specifications are subject to change without notice.
Revised: 05/01/2023

Certification & Compliance

UL Listed (all models)	UL1998
CSA (SB5032, SB5060 models)	LR 53428
cULus Listed	Class A GFCI (UL 943) E330856 EGFPD (UL 943/UL 1053) E359574
UL Listed	Class C, D SPGFCI (UL 943C) E352763

Ordering Information

ORDERING NUMBER	LOAD RATING (A)	VOLTAGE (V)	TRIP LEVEL (MA)	UL CLASS	ENCLOSURE
SB5032-001-0	32	208	20 (Fixed)	UL 943C Class C SPGFCI	NEMA 4X, IP69K
SB5032-201-0		480			
SB5032-301-0		600		UL 943C Class D SPGFCI	
SB5032-011-0		208	6, 10–100 in increments of 10 (Selectable)	UL 943 / UL 1053 EGFPD	
SB5032-211-0		480			
SB5032-311-0		600			
SB5032-021-0		208	6 (Fixed)	UL 943 Class A GFCI	
SB5060-001-0	60	208	20 (Fixed)	UL 943C Class C SPGFCI	
SB5060-201-0		480			
SB5060-301-0		600		UL 943C Class D SPGFCI	
SB5060-011-0		208	6, 10–100 in increments of 10 (Selectable)	UL 943 / UL 1053 EGFPD	
SB5060-211-0		480			
SB5060-311-0		600			
SB5060-021-0		208	6 (Fixed)	UL 943 Class A GFCI	
SB5080-001-0	80	208	20 (Fixed)	UL 943C Class C SPGFCI	
SB5080-201-0		480			
SB5080-301-0		600		UL 943C Class D SPGFCI	
SB5080-011-0		208	6, 10–100 in increments of 10 (Selectable)	UL 943 / UL 1053 EGFPD	
SB5080-211-0		480			
SB5080-311-0		600			
SB5080-021-0		208	6 (Fixed)	UL 943 Class A GFCI	
SB5100-001-0	100	208	20 (Fixed)	UL 943C Class C SPGFCI	
SB5100-201-0		480			
SB5100-301-0		600		UL 943C Class D SPGFCI	
SB5100-011-0		208	6, 10–100 in increments of 10 (Selectable)	UL 943 / UL 1053 EGFPD	
SB5100-211-0		480			
SB5100-311-0		600			
SB5100-021-0		208	6 (Fixed)	UL 943 Class A GFCI	

©2023 Littelfuse, Inc.
Specifications are subject to change without notice.
Revised: 05/01/2023

Dimensions Millimeters [inches]

SB5060

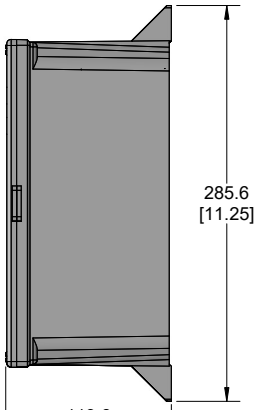

SIDE

FRONT

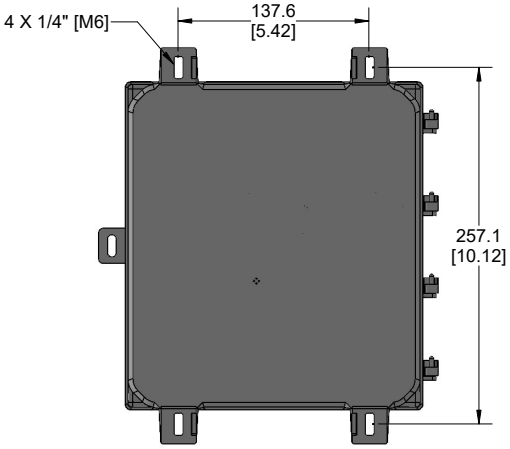

REAR
(MOUNTING DETAIL)

SB5100

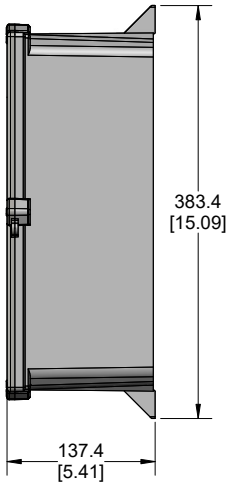

SIDE

FRONT

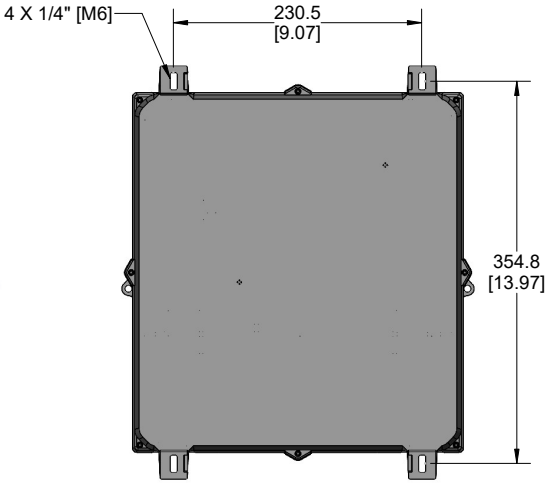

REAR
(MOUNTING DETAIL)

©2023 Littelfuse, Inc.
Specifications are subject to change without notice.
Revised: 05/01/2023

Simplified Circuit Diagram

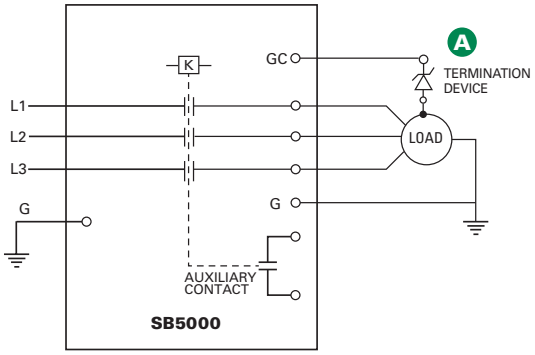

Connection Diagram

The SB5000 is installed in-line between incoming power or existing overcurrent protection device and the load.

Disclaimer Notice – Information furnished is believed to be accurate and reliable. However, users should independently evaluate the suitability of and test each product selected for their own applications. Littelfuse products are not designed for, and may not be used in, all applications. Read complete Disclaimer Notice at **www.littelfuse.com/product-disclaimer.**

©2023 Littelfuse, Inc.
Specifications are subject to change without notice.

Revised: 05/01/2023