820/821/823/824 Series

Panel Mount Enclosed Fuseholders

820 0000 0005 (Black)
820 0000 0205 (White)

821 0000 0005

823 0000 0005

824 0000 0005 (Black)
824 0000 0205 (White)

835 0000 0005 (Black)
835 0000 0205 (White)

837 0000 0005

Dimensions 820

820 Series

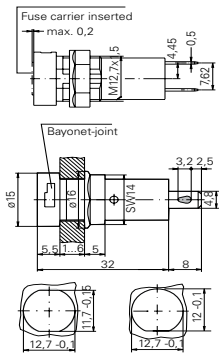

821 Series

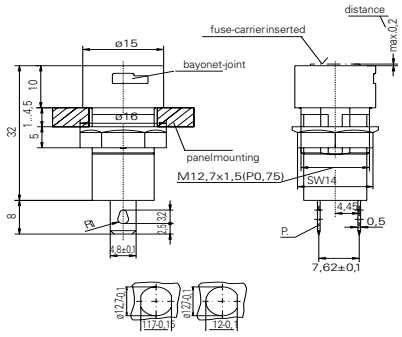

823 Series

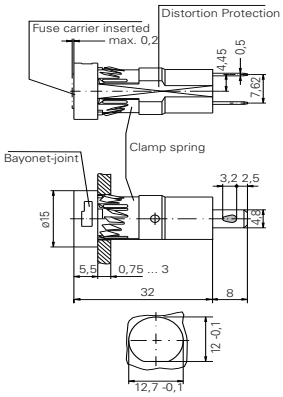

824 Series

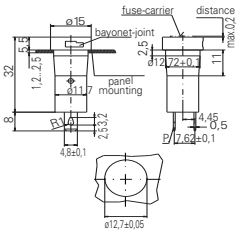

835 Cap

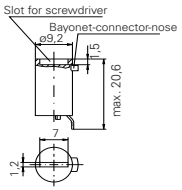

837 Cap

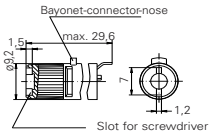

Additional Information

Resources 820 Series	**Accessories 820 Series**	**Samples 820 Series**
Resources 821 Series	**Accessories 821 Series**	**Samples 821 Series**
Resources 823 Series	**Accessories 823 Series**	**Samples 823 Series**
Resources 824 Series	**Accessories 824 Series**	**Samples 824 Series**

Specifications are subject to change without notice. Application testing is strongly recommended.

© 2022 Littelfuse, Inc.
Specifications are subject to change without notice.
Revised: GD. 12/08/22

820/821/823/824 Series
Panel Mount Enclosed Fuseholders

Product Characteristics

	820 Series	820 20 Series	821 Series	823 Series	824 Series	824 20 Series
Compatible Fuses	5x20mm					
Materials	**Holder/Cap:** Black Thermoplastic UL 94 V-0	**Holder/Cap:** White Thermoplastic PBT, UL94 V-0 **Nut:**Thermoplastics, black, UL94 V-0	**Holder/Cap:** Thermoplastic black, UL94 V-0	**Holder/Cap:** Black Thermoplastic UL94 V-0	**Holder/Cap:** Thermoplastic UL 94V-0, black	**Holder/Cap:** Thermoplastic UL94 V-0, white
	Metal Parts: Copper alloy, corrosion protected					
				Clamp Spring: Spring steel, non-treated		
	Terminals: Solderable, tinned					
Electrical Data (23°C)	**Rated Voltage:** 250V					
	Rated Current: 6.3A (VDE) 16A (UL/CSA)					
	Rated Power: 2.5 W (VDE)	**Rated Power:** 2.5 W (VDE)	**Rated Power:** 2.5 W (VDE)	**Rated Power:** 4 W (VDE)		**Rated Power:** 4 W
Mounting	12.7mm diameter D-hole or double D-hole Admissible torque on plastic hex nut is 1.2Nm		12.7mm diameter D-hole or double D-hole (panel 1mm - 4.5mm) Admissible torque on plastic hex nut is 1.2Nm	Pluggable with clamping spring into 12.7mm diameter D-hole (panel thickness 0.75mm-3mm)	Pluggable (panel thickness 1.2 mm-2.5 mm)	
Terminals	Solderable or 4.8mm quick connect-fits 0.5mm tab					
Protection Category	IP 40 (IEC 60529) PC2 (IEC 60127-6)					
Operating Temperature	-25°C to +70°C					
Climatic Test	-25 °C/+70 °C/21 days (IEC 60068-2-1...3)					
Stock Conditions	+10°C to +60°C relative humidity ≤ 75% yearly average, without dew, maximum value for 30 days - 95%					
Vibration Resistance	24 cycles at 15 min. each (IEC 60068-2-6)10 - 60Hz at 0.75mm amplitude 60 - 2000Hz at 10g acceleration					
Contact Resistance	≤ 5mΩ					
Dielectric Strength	> 1.5 kV					
Impulse Voltage	4kV, 50Hz, 1min, dry	4kV with 1,2µs/50µs		4kV, 50Hz, 1 min., dry		
Insulation Resistance	> 10^3 MΩ (500 VDC, 1 min.)					
Solderability	235°C, 3 sec (Wave) 350°C, 1 sec. (Solder Iron)	235°C, 2 sec. (Solder Bath) (IEC 60068-2-20) 350°C, 3 sec. (Solder Iron) (IEC 60068-2-20)		235°C, 3 sec. (Wave) 350°C, 1 sec. (Soldering Iron)		
Soldering Heat Resist	260°C, 5 sec. (IEC 60068-2-20)					
Min. Cross Section	Conductor - 2.5mm²					
Marking	820, 250 V, Approvals		821, 250V, Approvals	823, 250V, Approvals	824, 250V, Approvals	
Unit Weight	4.0g (Holder) / 1.6g (835) / 2.2g (837)	4.0 g (820) / 1.6 g (835)	4.0g (821) / 1.6g (835) / 2.2g (837)	3.8g (Holder) / 1.6g (835) / 2.2g (837)	3.3g (824) / 1.6g (835) / 2.2g (837)	3.3g (824) / 1.6g (835) / 2.2g (837)

Agency Approval

Agency	Agency File Number					
	132225	125183	135536	122096	122098	-
	E 70164	E70164	E70164	E 70164	E70164	-
	47574	47574	47574	47574	47574	-

Ordering Information

Ordering Number: Holders	**82000000005**	**82000000205**	**82100000005**	**82300000005**	**82400000005**	**82400000205**
Ordering Number: Caps	Flush Mount Type: **83500000005 / 83500000205** Finger Grip Type **83700000005**					
Packaging	Bulk 100 Pcs all items listed above					

Disclaimer Notice - Information furnished is believed to be accurate and reliable. However, users should independently evaluate the suitability of and test each product selected for their own applications. Littelfuse products are not designed for, and may not be used in, all applications. Read complete Disclaimer Notice at: www.littelfuse.com/disclaimer-electronics.

© 2022 Littelfuse, Inc.
Specifications are subject to change without notice.
Revised: GD. 12/08/22