Littelfuse®
Expertise Applied | Answers Delivered

SE-CS30 SERIES

Current Sensor

Description

The SE-CS30 series is a sensitive nickel-core current transformer used with Littelfuse relays to detect low levels of earth-leakage current.

Specifications

Turns Ratio	600:1
Current Rating	30:0.05 A
Accuracy	3% @ 0.06 VA
Frequency	50-400 Hz
Insulation Level	600 V
Operating Temperature	-55 to 60°C (-67 to 140°F)
Application	FPU-32, FPS, MPU-32, MPS, PGR-6100, PGR-6101, SE-330, SE-701, SE-704
Certification	CSA, UL, CE
Compliance	RoHS, IEC 60044-1

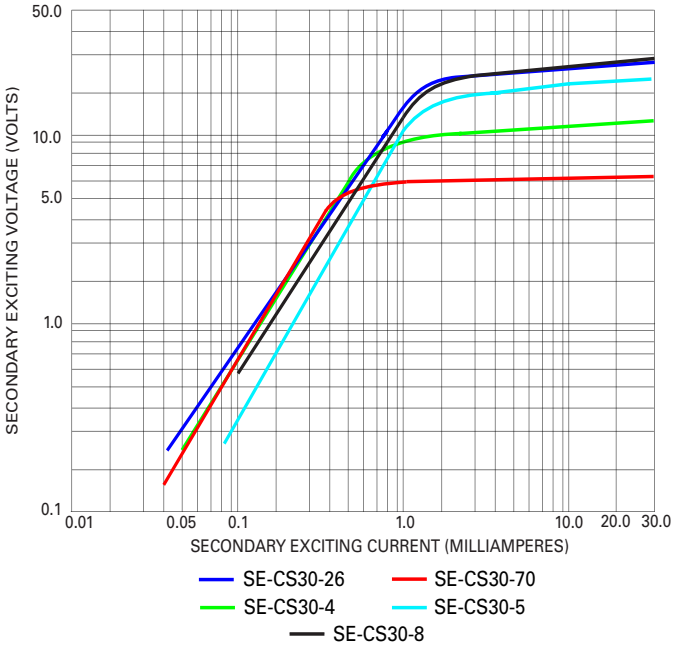

Ordering Information

ORDERING NUMBER	WINDOW SIZE, ID	WEIGHT
SE-CS30-26	26 mm (1.0")	0.5 kg (1.0 lb)
SE-CS30-70	70 mm (2.8")	1.2 kg (2.5 lb)
SE-CS30-4	95 mm (3.7")	1.3 kg (3.0 lb)
SE-CS30-5	140 mm (5.5")	2.1 kg (4.6 lb)
SE-CS30-8	200 mm (7.9")	4.3 kg (9.4 lb)

© 2018 Littelfuse Protection Relays & Controls

SE-CS30 SERIES

Dimensions and Mounting Diagram

SE-CS30-26

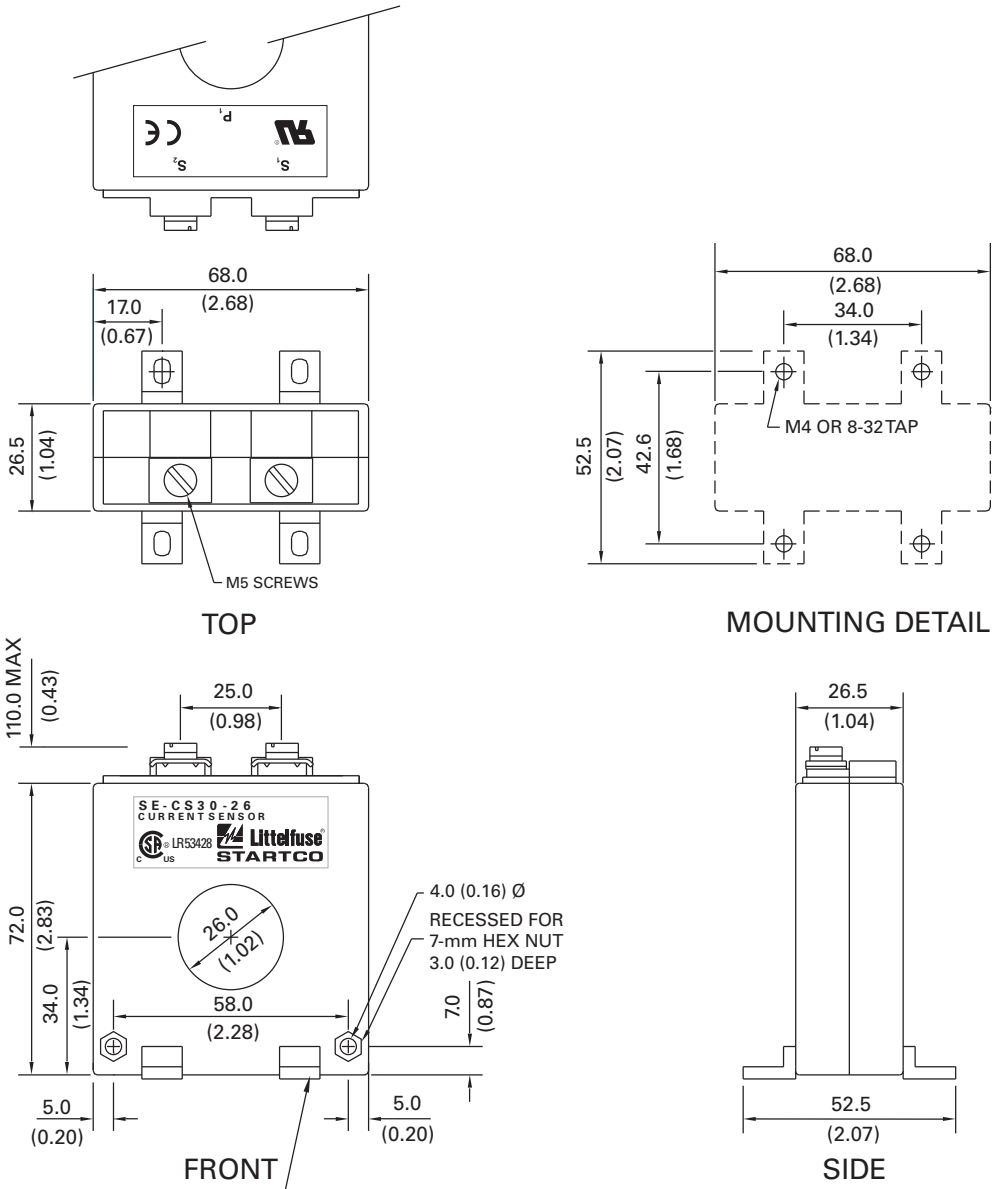

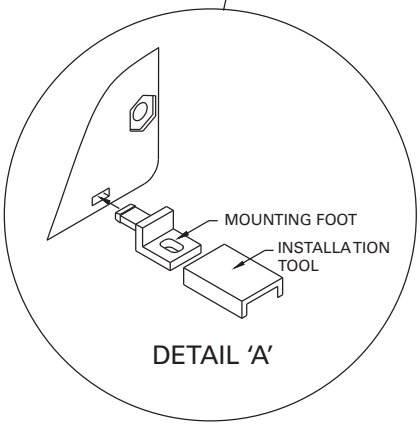

NOTES:

1. DIMENSIONS IN MILLIMETRES (INCHES).
2. PRESS MOUNTING FEET IN PLACE USING INSTALLATION TOOL PROVIDED (DETAIL 'A').
3. MOUNTING SCREWS: M4 OR 8-32.
4. RoHS COMPLIANT.
5. EN 60044-1 COMPLIANT.

© 2018 Littelfuse Protection Relays & Controls

SE-CS30 SERIES

Dimensions and Mounting Diagram

SE-CS30-70

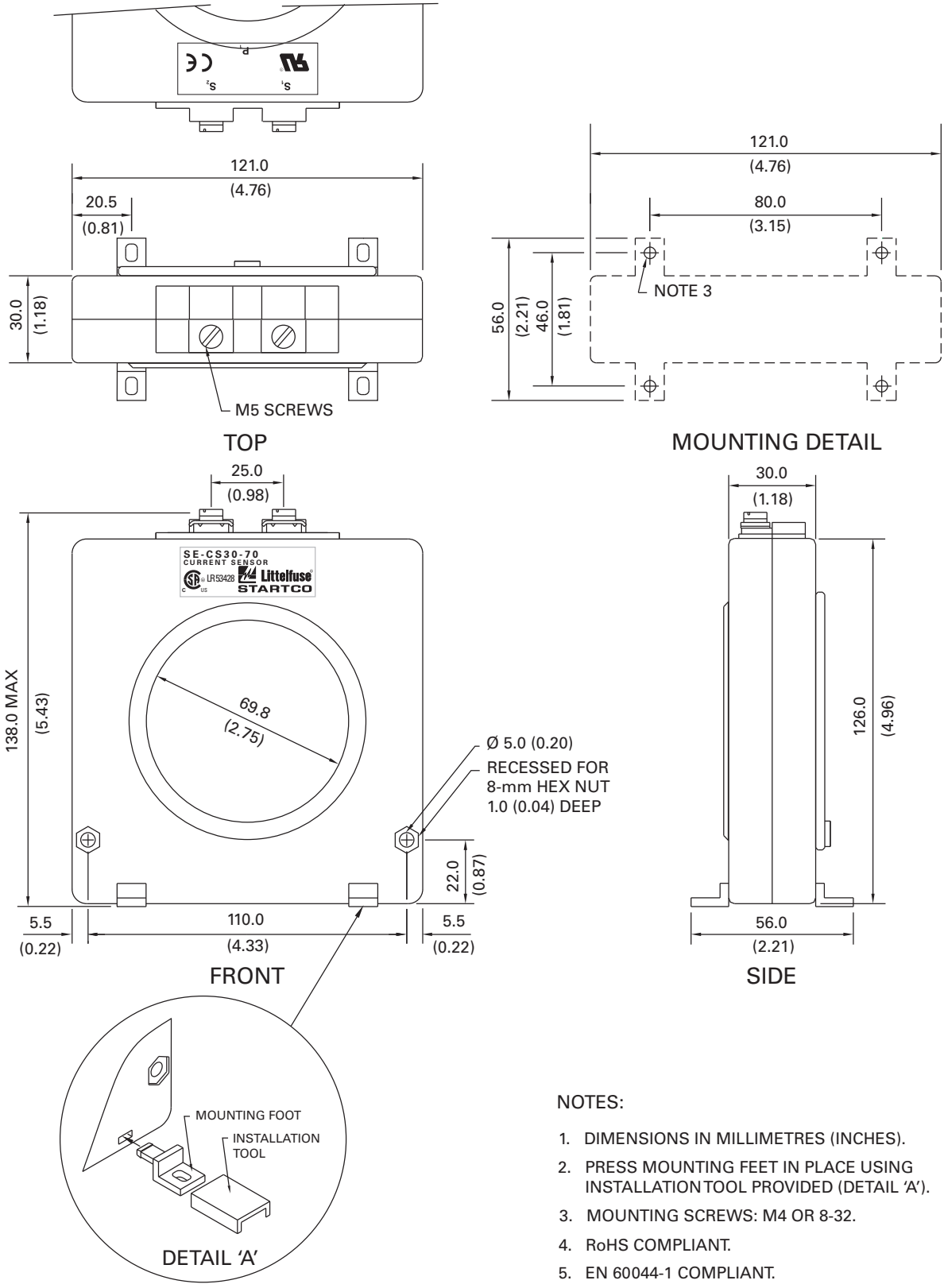

NOTES:

1. DIMENSIONS IN MILLIMETRES (INCHES).
2. PRESS MOUNTING FEET IN PLACE USING INSTALLATION TOOL PROVIDED (DETAIL 'A').
3. MOUNTING SCREWS: M4 OR 8-32.
4. RoHS COMPLIANT.
5. EN 60044-1 COMPLIANT.

© 2018 Littelfuse Protection Relays & Controls

SE-CS30 SERIES

Dimensions and Mounting Diagram

SE-CS30-4, SE-CS30-5, and SE-CS30-8

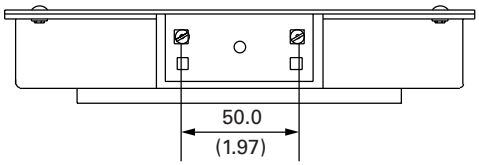

TOP (COVER REMOVED)

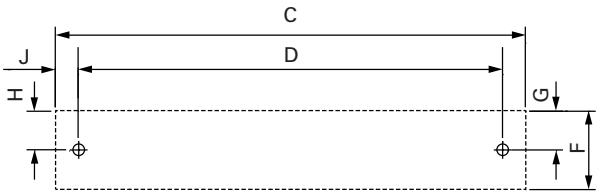

MOUNTING DETAIL

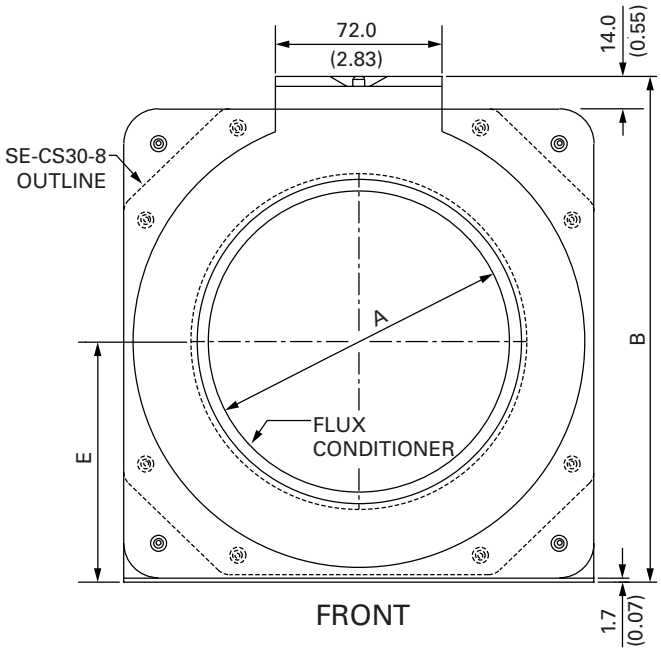

FRONT

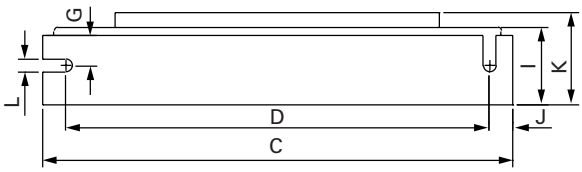

BOTTOM

NOTES:

1. DIMENSIONS IN MILLIMETRES (INCHES).
2. MOUNTING SCREWS: M5 OR 10-32.
3. RoHS COMPLIANT.
4. CE COMPLIANT.

	DIMENSIONS		
	SE-CS30-4	SE-CS30-5	SE-CS30-8
A	95.0 (3.74)	130.0 (5.12)	200.0 (7.87)
B	175.0 (6.89)	218.0 (8.78)	309.0 (12.17)
C	158.0 (6.22)	203.0 (7.99)	290.5 (11.44)
D	141.0 (5.55)	178.0 (7.01)	267.5 (10.50)
E	82.0 (3.22)	103.5 (4.07)	150.0 (5.90)
F	32.0 (1.26)	32.0 (1.26)	34.0 (1.34)
G	17.5 (0.69)	11.0 (0.43)	11.0 (0.43)
H	15.0 (0.59)	13.3 (0.52)	13.3 (0.52)
I	33.0 (1.30)	34.0 (1.34)	43.0 (1.69)
J	9.0 (0.35)	11.0 (0.43)	11.5 (0.45)
K	40.0 (1.57)	40.0 (1.57)	50.0 (1.97)
L	5.3 (0.21)	7.0 (0.28)	7.0 (0.28)

Disclaimer Notice – Information furnished is believed to be accurate and reliable. However, users should independently evaluate the suitability of and test each product selected for their own applications. Littelfuse products are not designed for, and may not be used in, all applications. Read complete Disclaimer Notice at **www.littelfuse.com/product-disclaimer.**