Radial Leaded Fuse Holders

Fuse Holder > 340 Series

340 Series RF Shielded / Watertight Panel Mount Fuse Holders for 3AB/3AG Fuses

Dimensions

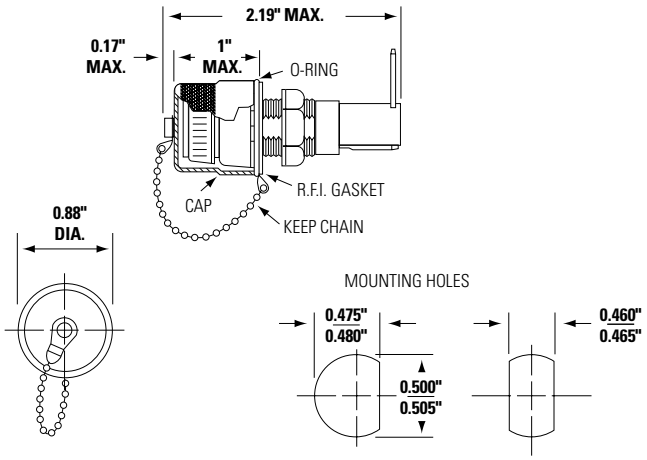

Product Characteristics

Compatible Fuses	**For 3AG and 3AB Fuses**
Description	Radio frequency shielded fuseholders eliminate possible transmission or reception of RF signals through the hole in the chassis in which the fuseholder is mounted. These fuseholders comply with the watertight construction requirement of MIL-PRF-19207 and the Shock-Safe requirements of IEC 60127-6. A rubber O-ring and conductive gasket maintain RF shielding and watertight construction.
Electrical	Rated at 20 amperes for any voltage up to 300 volts.
Ambient Temperature	–40°C to +85°C.
Dielectric Strength	4000 volts minimum.
Insulation Resistance	10,000 meghom minimum at 500 V.
Contact Resistance	Less than .005 ohms average at currents up to 1 amp.
Mounting	Withstand 15 Lb-in mounting torque. Maximum panel thickness is 0.31"
Molded Parts	Body material: Thermoplastic
Knob Material	Thermoplastic
Terminals	Brass. Tin plated, accept solder or .187" female connector.

Refer to Fuseology for information on proper fuseholder re-rating.

Agency Approvals

Agency	Agency File Number
	7316

Additional Information

Datasheet | Resources | Samples

Ordering Information

Part Number	Brass Shielding Cap Finish	Packing
03400312Z	Nickel plated	Bulk (100 Pieces)
03400313Z	Dull Black	Bulk (1 Piece)

Disclaimer Notice - Information furnished is believed to be accurate and reliable. However, users should independently evaluate the suitability of and test each product selected for their own applications. Littelfuse products are not designed for, and may not be used in, all applications. Read complete Disclaimer Notice at: www.littelfuse.com/disclaimer-electronics.

© 2019 Littelfuse, Inc.
Specifications are subject to change without notice.
Revised: 12/10/19