SE-330, SE-330HV SERIES

Neutral-Grounding-Resistor Monitor

Simplified Circuit Diagram

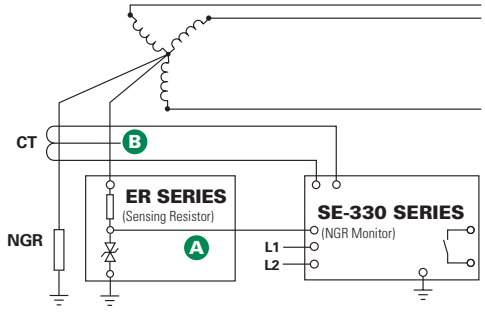

For detailed wiring diagram, see adjacent page.

Ordering Information

ORDERING NUMBER		POWER SUPPLY	COMM			K4 UNIT HEALTHY CONTACT
SE-330	-	X	X	-	0	X
SE-330 for applications 35 kV or less SE-330HV for 72 kV applications		0=120/240 Vac/Vdc 2=48 Vdc	0=USB Only 1=DeviceNet 3=EtherNet (Dual RJ45) 4=EtherNet (SC Fiber & RJ45) 5=EtherNet (Dual SC Fiber) 6=IEC61850 (Dual RJ45) 7=IEC61850 (SC Fiber & RJ45) 8=IEC61850 (Dual SC Fiber)			0=Normally Open 1=Normally Closed

NOTE: For Australian applications, see the SE-330AU.

ACCESSORIES	REQUIREMENT
ER Series Sensing Resistor	Required
Current Transformer	Required
SE-IP65CVR-G	Optional
SE-MRE-600	Optional
RK-332	Optional
NGRM-ENC	Optional
PGA-0520	Optional
SE-330-SMA	Optional

Description

The SE-330 is an advanced ground-fault and neutral-grounding-resistor monitoring relay that is compliant with Rule10-302 of the 2018 Canadian Electrical Code Part I (CE Code). It measures neutral current, neutral-to-ground voltage, and neutral-to-ground resistance. It provides continuous monitoring of the neutral-to-ground path to verify that the neutral-grounding resistor (NGR) is intact and that it has not been bypassed or shorted. An open NGR renders current-sensing ground-fault protection inoperative and could result in a false belief that the system is functioning properly. A shorted NGR results in higher-than-expected ground-fault current. The SE-330 can be used with low- and medium-voltage transformers and generators with low- or high-resistance grounding used in processing, manufacturing, chemical, pulp and paper, petroleum, and water-treatment facilities. For high-voltage applications, use the SE-330HV. For applications that require conformance to Australian standards, use the SE-330AU.

Resistor Monitoring

The SE-330 combines the measured values of resistance, current, and voltage to continuously determine that an NGR is intact. It is able to detect an open or shorted resistor with or without a ground fault present. Sensing resistors are matched to the system voltage and are used to monitor NGRs on systems up to 72 kV.

Ground-Fault Monitoring

The SE-330 uses an application-appropriate current transformer to reliably detect ground-fault currents as small as 100 mA. Discrete-Fourier Transform (DFT) filtering ensures that false trips due to harmonic noise from adjustable-speed drives do not occur. Should the resistor open and a ground fault subsequently occur, the SE-330 will detect the fault through voltage measurement, while other current-only sensing relays would be ineffective.

Pulsing Ground-Fault Location

The SE-330 is capable of controlling a pulsing contactor, which is used to switch the NGR resistance in a pulsing-compatible NGR package. The resulting ground-fault current is distinguishable from charging currents and noise and will only appear upstream of the ground fault, making fault location fast and easy, even without isolating feeders or interrupting loads.

Accessories

A

ER Series Sensing Resistor
Required interface between the power system and the SE-330/SE-330HV. Eliminates hazardous voltage levels at the relay.

B

ELCT5 Series Ground-Fault Current Transformer
Sensitive ground-fault current detection (5 A primary).

ELCT30 Series Ground-Fault Current Transformer
Sensitive ground-fault current detection (30 A primary).

Other Current Transformer
For low-resistance NGRs choose a CT primary approximately equal to the NGR rating. Inputs are provided for 1- and 5- A- secondary CTs.

SE-IP65CVR-G Hinged Transparent Cover
Watertight cover, tamper resistant, IP65 protection.

Littelfuse reserves the right to make product changes, without notice. Material in this document is as accurate as known at the time of publication. Visit Littelfuse.com for the most up-to-date information.

© 2019 Littelfuse Protection Relays & Controls

SE-330, SE-330HV SERIES

Neutral-Grounding-Resistor Monitor

Features & Benefits

FEATURES	IEEE #	BENEFITS
Continuous NGR monitoring	3	Detects resistor failure within seconds, reduces transient-overvoltage risk, removes risk of ground-fault-detection failure
Shorted NGR detection	3	Detects a ground fault on the neutral that could bypass the resistor, ensures fault current is not higher than expected
Ground-fault detection	50G/N, 51G/N, 59N	Main or backup protection to detect a ground fault anywhere on the monitored system
Adjustable pickup (2-100%)		Select greatest sensitivity without false operation, adjustable in 1% increments (MEM setting)
Adjustable time delay (0.1-10 s)		Adjustable trip delay allows quick protection and system coordination
Universal CT compatibility		Allows the use of a CT that gives required ground-fault settings
Programmable output contacts		Two programmable Form C and One programmable Form A (Ground Fault, Resistor Fault, Unit Health)
Selectable contact operating mode		Selectable fail-safe or non-fail-safe operating modes allows connection to shunt or undervoltage breaker coil or alarm circuit (K1, K2, and K3 output contacts)
Analog output (4-20 mA)		Connect an optional PGA-0520 meter or control system
Pulsing output (SE-330 only)		Control the operation of a pulsing ground-fault-location circuit
Trip records		On-board 100-event (with date and time) recorder helps with system diagnostics
Harmonic filtering (DFT)		Eliminate false trips due to harmonic noise from ASDs
Local communications		Mini USB port to view measured values, configure settings, and check event records
Data logging		On-board microSD card (included) can be used for long-term data logging
Network communications		Remotely view measured values and event records, reset trips, and cause a remote trip Available Protocol Options: **IEC 61850 -** with dual RJ45, SC Fiber and RJ45, or Dual SC Fiber Interface **Modbus TCP and Ethernet/IP** - with dual RJ45, SC Fiber and RJ45, or Dual SC Fiber Interface **DeviceNet -** with CAN interface
Software		PC-interface software (SE-MON330) is available at Littelfuse.com/RelaySoftware
Selectable reset mode		Selectable latching or auto-reset operation
Unit-healthy output		Verifies SE-330 is operating correctly, available as Form A or Form B output contact
Conformal coating		Internal circuits are conformally coated to protect against corrosion and moisture

Typical Values

SYSTEM VOLTAGE (VOLTS)	NEUTRAL-GROUNDING RESISTOR		SENSING RESISTOR		GROUND-FAULT PICKUP LEVEL (AMPERES)	V_N PICKUP LEVEL (VOLTS)
	CURRENT (AMPERES)	RESISTANCE (OHMS)	MODEL	RESISTANCE (SWITCH S5 SETTING)		
480	5	55	ER-600VC	20 kΩ	2.5	170
600	5	69	ER-600VC	20 kΩ	2.5	200
2,400	5	277	ER-5KV	20 kΩ	2.5	800
4,160	5	480	ER-5KV	20 kΩ	3	1,700
7,200	10	416	ER-15KV	100 kΩ	2	170 x 5 = 850
14,400	15	554	ER-15KV	100 kΩ	3	340 x 5 = 1,700

DISCLAIMER: The above table is for illustrative purposes only. Actual values may differ based on a variety of individual system considerations, such as capacitive charging current and coordination study results.

Wiring Diagram

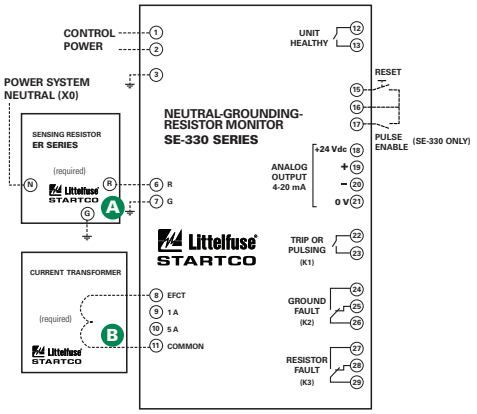

Specifications

IEEE Device Numbers	Ground Fault (50G/N, 51G/N, 59N), Checking Relay (3), Lockout Relay (86)
Input Voltage	See ordering information
Dimensions	**H** 213 mm (8.4"); **W** 98 mm (3.9"); **D** 132 mm (5.2")
GF Trip-Level Settings	2-100% of CT-Primary Rating in 1% increments
GF Trip-Time Settings	0.1-10 s
Vn Trip-Level Settings	20-2,000 Vac (≤5 kV systems) 100-10,000 Vac (>5 kV systems)
Contact Operating Mode	Selectable fail-safe or non-fail-safe (K1, K2, K3)
Harmonic Filtering	Standard feature
Reset Button	Standard feature
Output Contacts	Two Form A and two Form C
Pulsing Circuit	1.0-3.0 s in 0.2 s increments (SE-330 only)
Approvals	CSA certified, UL Listed (E340889), CE (European Union), RCM (Australian)
Communications	Mini USB (standard); DeviceNet (optional), IEC 61850 (optional), Modbus TCP and EtherNet/IP (optional)
Analog Output	4-20 mA, self or loop powered
Conformally Coated	Standard feature
Warranty	5 years
Mounting	Panel and Surface (optional)

Littelfuse reserves the right to make product changes, without notice. Material in this document is as accurate as known at the time of publication. Visit Littelfuse.com for the most up-to-date information.

© 2018 Littelfuse Protection Relays & Controls