Littelfuse®
Expertise Applied | Answers Delivered

USB3.1 Type C: ESD Protection Solution

PROVEN ULTRA-LOW CAPACITANCE

Small Outline Solutions Supporting USB 3.1 Type C

Implementing USB 3.1 Type C SuperSpeed+ presents a set of challenges to design engineers. Littelfuse ESD discrete solutions available in sizes from 0402 (1.0mm x 0.6mm) down to 01005 (0.4mm x 0.2mm).

USB 3.1 Type C Offers:

- Direction agnostic insertions
- Fast-charging profiles for batteries
- Exceptionally fast data transfer rates

USB 3.1 Type C Demands:

- Virtually invisible ESD and Surge Protection
- Charging Port protection up to 20V and 5A
- Logic line protection, a unipolar interface
- Extremely low parasitic capacitance, inductance and resistance

Our Solutions Deliver:

- Ultra-low capacitance, robust ESD and Surge tolerant solutions for Data lines, VBus and Logic Interfaces
- Fast Acting surge and ESD capable solutions from 5-24V
- Unidirectional protection withstanding >5A (8/20µs) surge and ±30kV ESD
- Fast acting, semiconductor-based ESD protection, proven in ThunderBolt and USB 3.1 interfaces

Best Signal Integrity Solution in Smallest Packages

Focused on signal integrity, the SP0201U-ULC-01UTG (0201 DFN package) is the best solution for SuperSpeed+ lines, as it offers the lowest parasitic capacitance and inductance. Smaller packages present less parasitics.

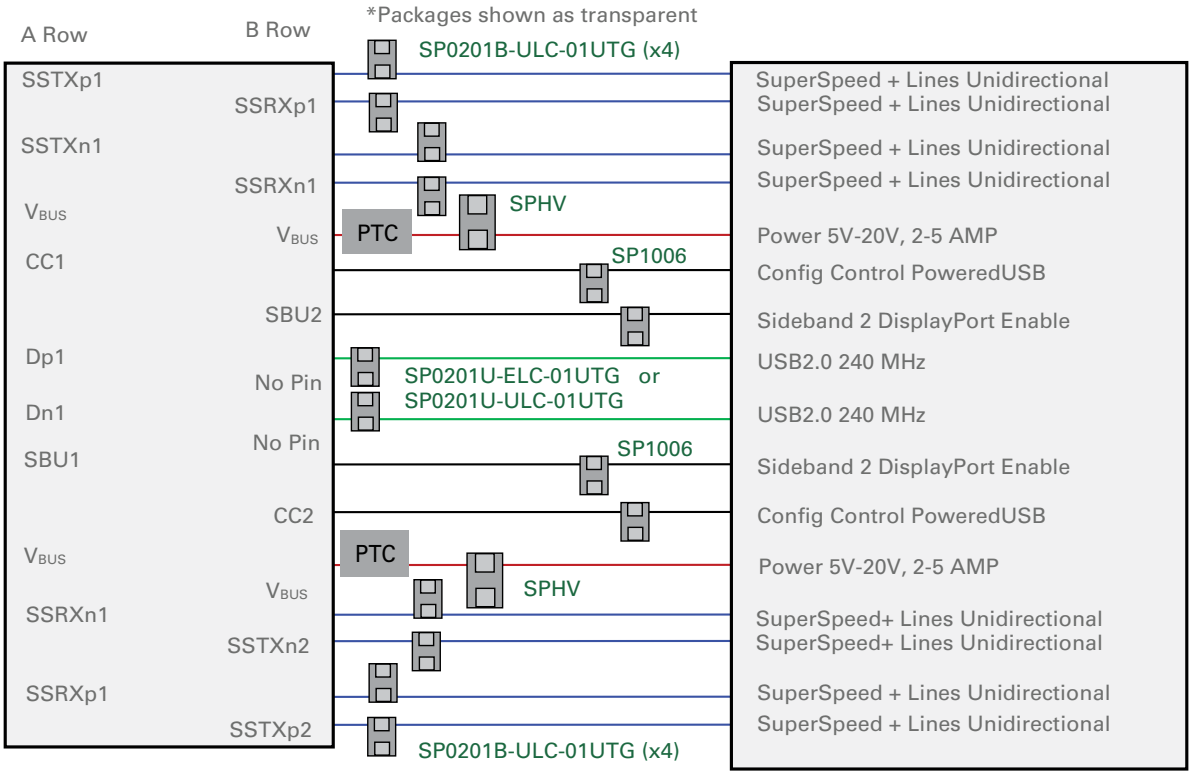

TVS Diode Arrays (SPA® Diodes)

Function	Desginators	Ordering Number	ESD Level	I/O Cap.@ Op. Freq. (Signal Integrity)	Operating Voltage	Standard Package
SuperSpeed+, USB 2.0	SStx SSrx, D+D-	SP0201B-ULC-01UTG	±20kV	0.15 pF	<5V	0201 DFN
Logic	SBU1/2, CC1/2	SP1003-01ETG / SP1006-01UTG	±30kV	30pF / 25pF	<5V	SOD-882 / 0201 DFN
Charging	Vbus	SPHV24-01ETG / SP24-01WTG-C-HV	±24kV	17pF	from 5V thru 24V	SOD-882 / 0201 DFN

PTC

Function	Desginators	Ordering Number	Voltage	Current	*Ihold* 20°C(A)	*Ihold* 60°C(A)	R1*max* (Ω)	Footprint
Over-temperature and Overcurrent Protection	Vbus	nanoSMD350LR-C	12V	3.5 A	4.8	1.90	0.0180	1206
		nanoSMD400LR-C	12V	4.0A	5.2	2.82	0.0100	1206
		microSMD450LR-C	12V	4.5A	6.2	3.30	0.0085	1210

© 2017 Littelfuse