PART NUMBER	FIGURE	"A"	"B"	"C"	"D"	LEAD "A" COLOR	LEAD "B" COLOR	INSULATION TYPE	WIRE SIZE	RATING MARK	PKG QTY
FHJC1001G	1	102.0±5.0	102.0±5.0	9.0±2.0	9.0±2.0	RED	RED	GXL (STANDARD)	10 AWG	40A	250
FHJC1001GB	1	102.0±5.0	102.0±5.0	9.0±2.0	9.0±2.0	RED	RED	TXL (STANDARD)	10 AWG	40A	250
FHJC1001FXA	1	280.0±5.0	400.0±5.0	9.0±2.0	9.0±2.0	RED	RED	GXL (STANDARD)	10 AWG	40A	200
FHJC1001HC	1	1070.0±5.0	132.0±5.0	7.0±2.0	13.0±2.0	RED	RED	GXL (STANDARD)	10 AWG	40A	100
FHJC1002G	1	102.0±5.0	102.0±5.0	9.0±2.0	9.0±2.0	RED	RED	GXL (STANDARD)	8 AWG	60A	250
FHJC1002GA	1	1050.0±10.0	235.0±5.0	9.0±2.0	9.0±2.0	RED	RED	GXL (STANDARD)	8 AWG	60A	100
FHJC1002GB	1	1150.0±10.0	850.0±5.0	9.0±2.0	9.0±2.0	RED	RED	GXL (STANDARD)	8 AWG	60A	50
FHJC1002GC	1	400.0±5.0	400.0±5.0	9.0±2.0	9.0±2.0	RED	RED	GXL (STANDARD)	8 AWG	60A	50
FHJC1002GD	1	920.0±5.0	630.0±5.0	14.2±2.0	14.2±2.0	RED	RED	GXL (STANDARD)	8 AWG	60A	50
FHJC1002GE	1	1004.0±10.0	630.0±5.0	14.2±2.0	14.2±2.0	RED	RED	GXL (STANDARD)	8 AWG	60A	50
FHJC1002L	1	102.0±5.0	102.0±5.0	9.0±2.0	9.0±2.0	RED	RED	GXL (STANDARD)	8 AWG	60A	50
FHJC1002MB	1	247.0±5.0	247.0±5.0	9.0±2.0	9.0±2.0	RED	RED	GXL (STANDARD)	8 AWG	60A	200
FHJC2001G	2	102.0±5.0	102.0±5.0	9.0±2.0	9.0±2.0	RED	RED	GXL (STANDARD)	10 AWG	40A	250
FHJC2002G	2	102.0±5.0	102.0±5.0	9.0±2.0	9.0±2.0	RED	RED	GXL (STANDARD)	8 AWG	60A	250
FHJC2002L	2	102.0±5.0	102.0±5.0	9.0±2.0	9.0±2.0	RED	RED	GXL (STANDARD)	8 AWG	60A	50

NOTES:
1. HOLDER MATERIAL: BLACK TPV MATERIAL
2. CONTACTS: TIN-PLATED COPPER ALLOY
3. WIRE SIZE & LENGTH: SEE CHART
4. MAX TEMPERATURE: 125°C
5. RATING MARKING: SEE CHART
6. FUSE HOLDERS SHOULD NOT BE PLACED UNDER TENSION IN FINAL APPLICATION.
7. ALL PARTS PACKAGED BULK IN QTY SHOWN.

LTR	DATE	REVISION	CHK	APD
A	07/15/09	000735ER-RELEASE FHJC1002GA GMB		
B	12/16/09	SA37-ADDED TOLERANCES TO DMIS. GMB		
C	01/25/11	REMOVED MOUNTING HOLE THROUGH BODY (FIG 1.); COMPILED ALL FHJC HOLDERS ONTO ONE PRINT; ADDED PART # FHJC1001HC; UPDATED NOTES (CORRECTED MATERIALS, ADDED PKG QTY;) ADDED BRACKET VERSION VIEWS; PRINT NAME CHANGED FROM OL-FHJC1000G TO OL-FHJC00000. ERN-501557ERA KH		
D	04/30/15	511832GCA-RELEASE FHJC1002GB FYUE		
E	05/07/15	511833GCA-RELEASE FHJC1001GB FYUE		
F	07/06/15	514472GCA-CHANGE DIMENSIONS OF FHJC1002GB FYUE		
G	20/Apr/16	515810GCA-RELEASE FHJC1002GD AND FHJC1002GE FYUE		
H	02/Mar/17	517171ECC-CHANGE WIRE LENGTH 630 WAS 720 OF FHJC1002GD AND FHJC1002GE FYUE		

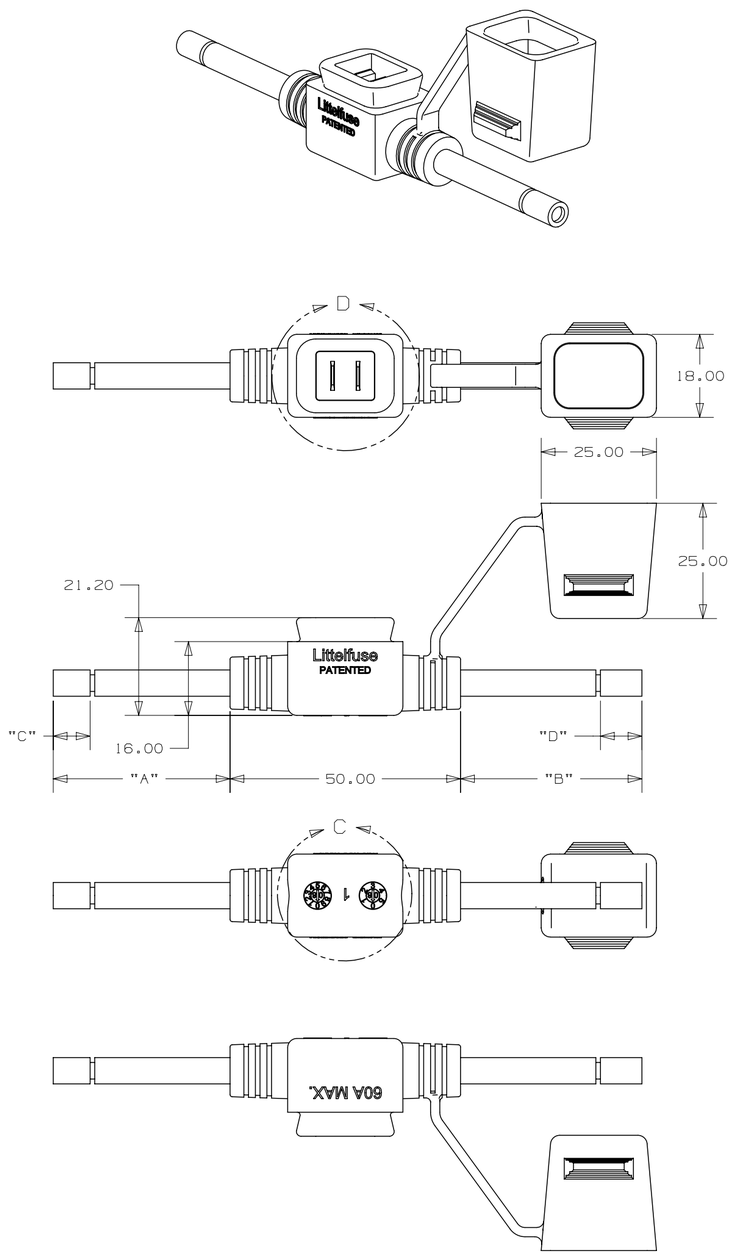

FIGURE 1. STANDARD HOLDER

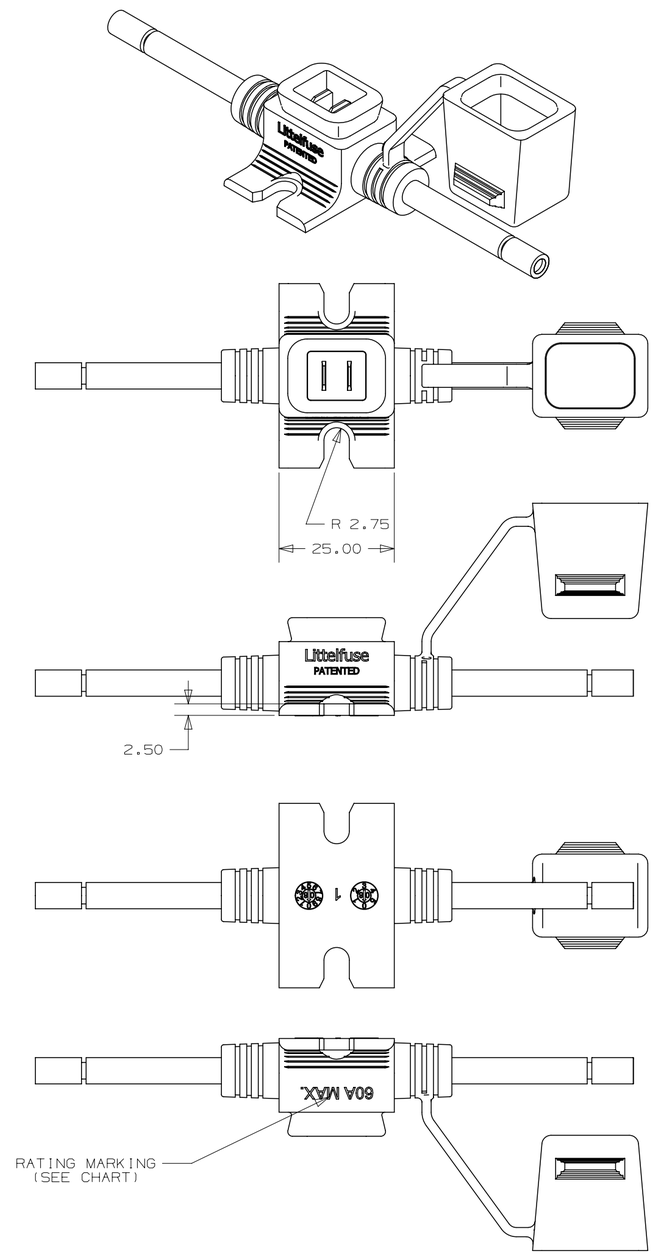

FIGURE 2. HOLDER WITH MOUNTING BRACKET

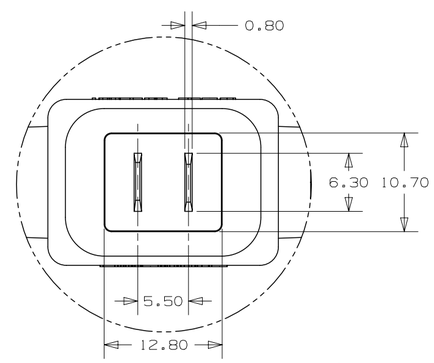

DETAIL D
SCALE 2:1

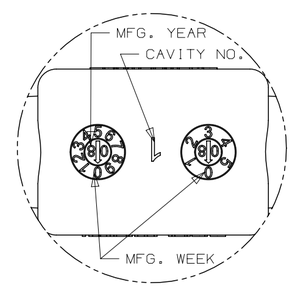

DETAIL C
SCALE 2:1

METRIC
ASSEMBLY

UNLESS OTHERWISE SPECIFIED, DIMENSIONS ARE IN MILLIMETERS.
DIMENSIONS IN BRACKETS [ ] ARE INCHES

UNLESS OTHERWISE SPECIFIED, DIMENSIONS DO NOT INCLUDE PLATING.

◎	DENOTES CRITICAL CHARACTERISTICS.
CPK	DENOTES CPK DIMENSIONS, -MINIMUM CPK VALUE
⟨ST⟩	DENOTES A CHARACTERISTIC THAT PROVIDES AN INDICATION OF PROCESS PERFORMANCE. PROCEDURE FOR MEASUREMENT AND TRACKING TO BE DEFINED IN LITTELFUSE INSPECTION INSTRUCTIONS
CP	DENOTES CP DIMENSIONS, -MINIMUM CP VALUE MUST BE WITHIN THE DIMENSIONAL LIMITATIONS SHOWN ON DRAWING AND INITIALLY LOCATED TO ALLOW FOR MAXIMUM TOOL LIFE

COPIES TO

1	9	18
2	10	19
3	12	20
4	13	21
5	14	23
6	15	33
7	16	43
8	17	53

MATL SPEC

FINISH

DRW GMB	DATE 07/15/09	SCALE 1:1
CHK	DATE	SUPER DR
APPD	DATE	FINSH GOOD WT GRAMS/PIECE

TOLERANCES UNLESS OTHERWISE SPECIFIED (REF. ISO 2768-mK)

DIMENSION	UP TO 0.5 - 3	OVER 3 - UP TO 6	OVER 6 - UP TO 30	OVER 30 - UP TO 120	OVER 120 - UP TO 400
TOLERANCE	±0.1	±0.1	±0.2	±0.3	±0.5

3RD ANGLE PROJECTION

TITLE INLINE JCASE HOLDER WITH STANDARD COVER

Littelfuse®
DES PLAINES, ILLINOIS 60016

REVISION H

DRWG. NO. OL-FHJC00000 SERIES

OUTLINE

CAD GENERATED DRAWING - NO PENCIL CHANGES ALLOWED