THIS DRAWING AND THE INFORMATION CONTAINED WITHIN IT ARE CONFIDENTIAL AND MAY NOT BE COPIED OR DISCLOSED WITHOUT THE WRITTEN PERMISSION OF LITTELFUSE.

REVISIONS				
ZONE	REV.	DESCRIPTION	DATE	APPROVED
	A	GCF#524705 INITIAL RELEASE	Dec/14/2021	D.ZHANG

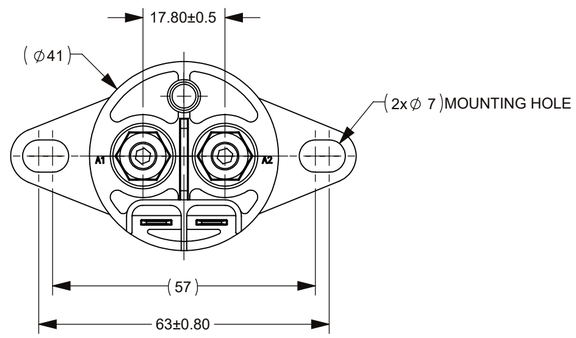

CIRCUIT SCHEMATIC DIAGRAM

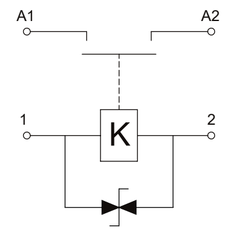

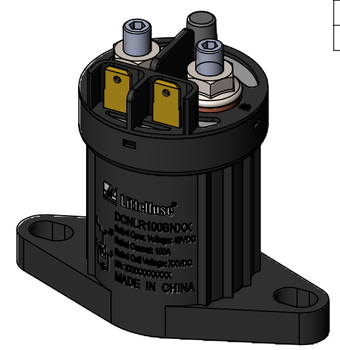

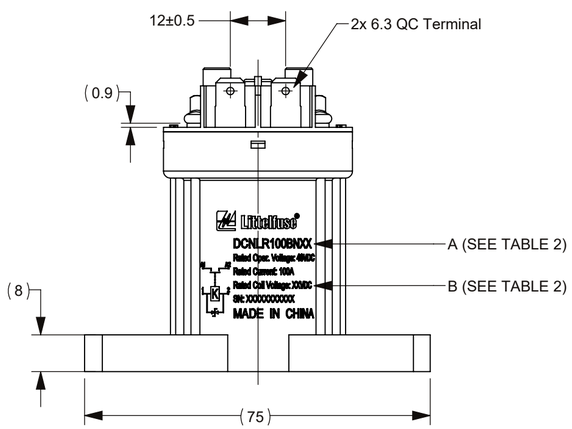

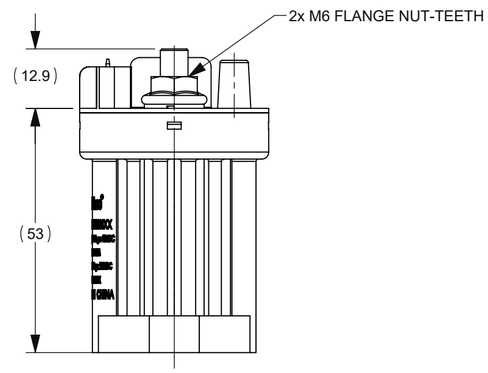

TABLE 1: TECHNICAL PARAMETERS

ITEM		PARAMETER		
		DCNLR100NB12	DCNLR100NB24	DCNLR100NB48
RATED COIL VOLTAGE		12V DC	24V DC	48V DC
OPERATING VOLTAGE IN COLD STATE AT (20±5)°C	PICKUP (V DC)	MAX 8.4	MAX 16.8	MAX 33.6
	RELEASE(V DC)	MIN 1.2	MIN 2.4	MIN 4.8
OPERATE TIME		MAX 25ms		
RELEASE TIME		MAX 12ms		
BOUNCE TIME		MAX 7ms		
MAIN CONTACT RESISTANCE (@ 20A)		MAX 2mΩ		
COIL POWER		APPROX 6W		
RATED CONTACT VOLTAGE		48V DC		
MAXIMUM CONTACT VOLTAGE		60V DC		
RATED CONTACT CURRENT		100A		
CONTACT VOLTAGE DROP		≤50mV@100 A		
DIELECTRIC STRENGTH (LEAKAGE CURRENT ≤1 mA)		2200V AC, 50Hz,1min.		
ELECTRICAL LIFE		50,000 CYCLES@24VDC/100A; 30,000 CYCLES@48VDC/100A		
INSULATION RESISTANCE		≥100MΩ@500VDC		
SHORT-TIME OVERLOAD CAPACITY		8Ie/1s; 5Ie/10s		
WORKING DUTY		CONTINUOUS		

TABLE 2

PRODUCT PN	"A" IN NAMEPLATE	"B" IN NAMEPLATE
DCNLR100NB12	DCNLR100NB12	12VDC
DCNLR100NB24	DCNLR100NB24	24VDC
DCNLR100NB48	DCNLR100NB48	48VDC

NOTES:
1. ALL SIZES ARE FOR REFERENCE ONLY.
2. MATERIALS AND FINISHED:
2.1 HOUSING: THERMOPLASTIC PLASTIC, UL94V-0.
2.2 CONTACTS: COPPER ALLOY.
3. PRODUCT PN AND NAMEPLATE CONFIGURATION RELATION SEE TABLE 2.
4. PRODUCT TECHNICAL PARAMETERS: SEE TABLE 1.
5. MAIN CONTACT ARRANGEMENT: SPST-NO.
6. CONNECTION BOLT: M6 BOLT, RECOMMENDED TORQUE 3.5 N•m ~ 4.5 N•m.
7. MOUNTING: M6 BOLT, RECOMMENDED TORQUE 3.5 N•m ~ 4.5 N•m.

DIMENSIONS ARE SHOWN IN MILLIMETERS. DIMENSIONS AND TOLERANCES ARE DEFINED ACCORDING TO ANSI/ASME Y14.5-1994.

PER CHI-NPD20-008 PROCEDURE

●	FIT/ FUNCTION CRITICAL CHARACTERISTICS
<S>	SAFETY/ COMPLIANCE CRITICAL CHARACTERISTICS SYMBOL
CPK	DENOTES CPK DIMENSIONS MINIMUM CPK VALUE
(ST)	DENOTES A CHARACTERISTIC THAT PROVIDES AN INDICATION OF PROCESS PERFORMANCE.PROCEDURE FOR MEASUREMENTAND TRACKINGTO BE DEFINED IN LITTELFUSE INSPECTION INSTRUCTIONS
CP	DENOTES CP DIMENSIONS, -MINIMUM CP VALUE MUST BE WITHIN THE DIMENSIONAL LIMITATIONS SHOWN ON DRAWING AND INITIALLY LOCATED TO ALLOW FOR MAXIMUM TOOL LIFE

	NAME	DATE
DRAWN	B. WU	Dec/14/2021
CHECKED	J. LI	Dec/14/2021
	-	-
	-	-

FORM NO: CVP-PE40-0005 REV B

THIRD ANGLE PROJECTION

DO NOT SCALE DRAWING

Littelfuse®
Expertise Applied | Answers Delivered

TITLE
DCNL 100A 48V CONTACTOR

SIZE C | DWG. NO. OUTLINE OL-DCNLR100NB CHART | REV. A

SCALE 1:1 | SHEET 1 OF 1