MM	IN
.25	.010
11.43	.450
17.78	.700
23.87	.940
36.57	1.44
44.45	1.750

9269

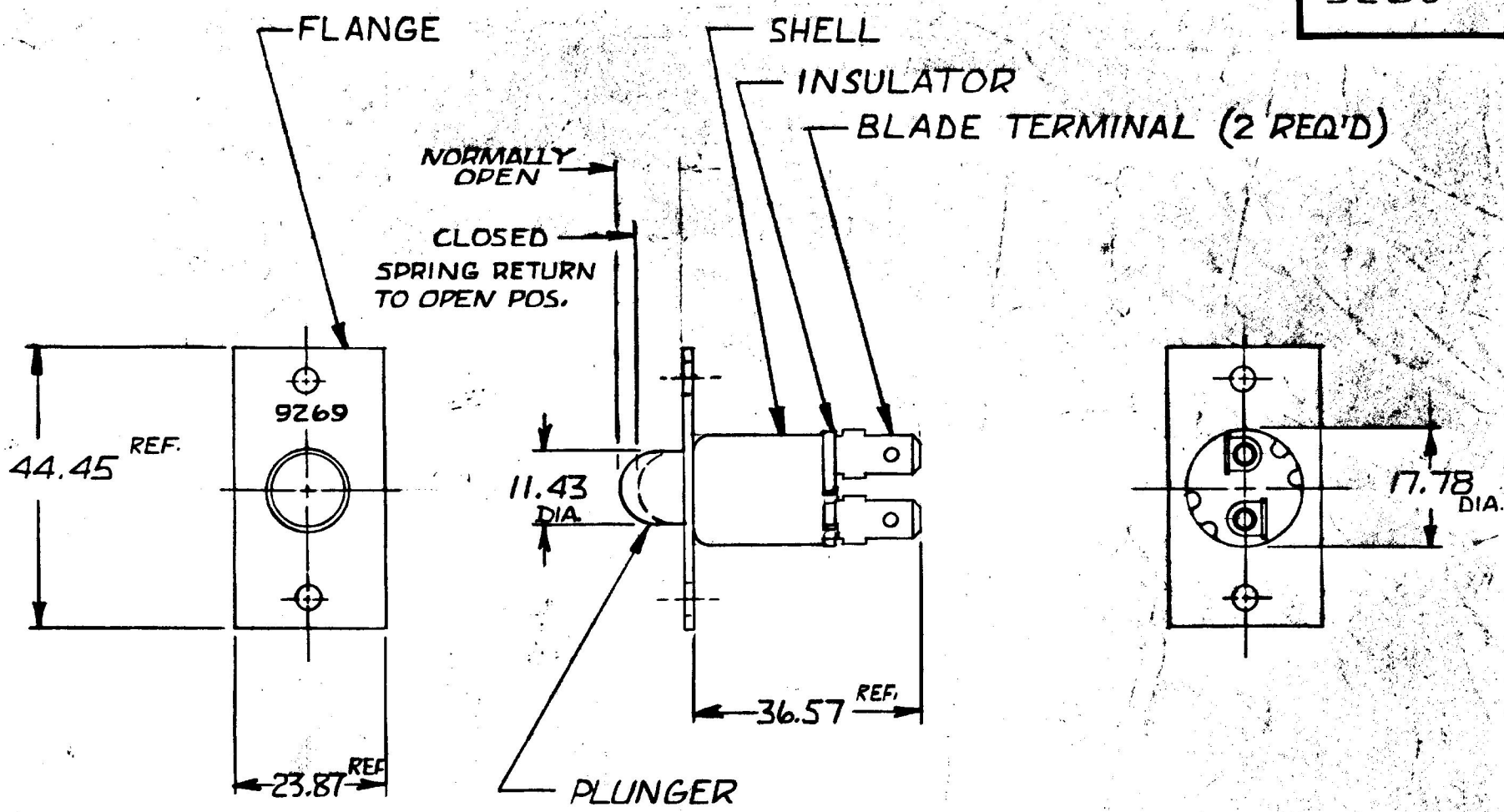

NOTE:
1. ALL STEEL PARTS PLATED

DO NOT SCALE

LET.	WAS	DATE	BY	LET	WAS	DATE	BY
				D	REVISED REDRAWN 21149	9-30-80	

MATERIAL	DRAWN	CHECKED	APPRV'D.	SCALE	DATE DRAWN
— " —	EA	RJA		1:1	2-9-60
FINISH — " —	Cole Hersee Co. 20 OLD COLONY AVENUE, SOUTH BOSTON, MA. U.S.A. 02127				DATE BLUEPRINT
TOLERANCES DECIMAL ± .010 METRIC ± .25	SAFETY LOCK SWITCH				9269

CH-188(4-78)

Confidential Property of Cole Hersee