MM	INS
.25	.010
.96	.038
1.82	.072
11.93	.470
12.70	.500
13.71	.540
19.05	.750
22.20	.874
33.27	1.310

55017

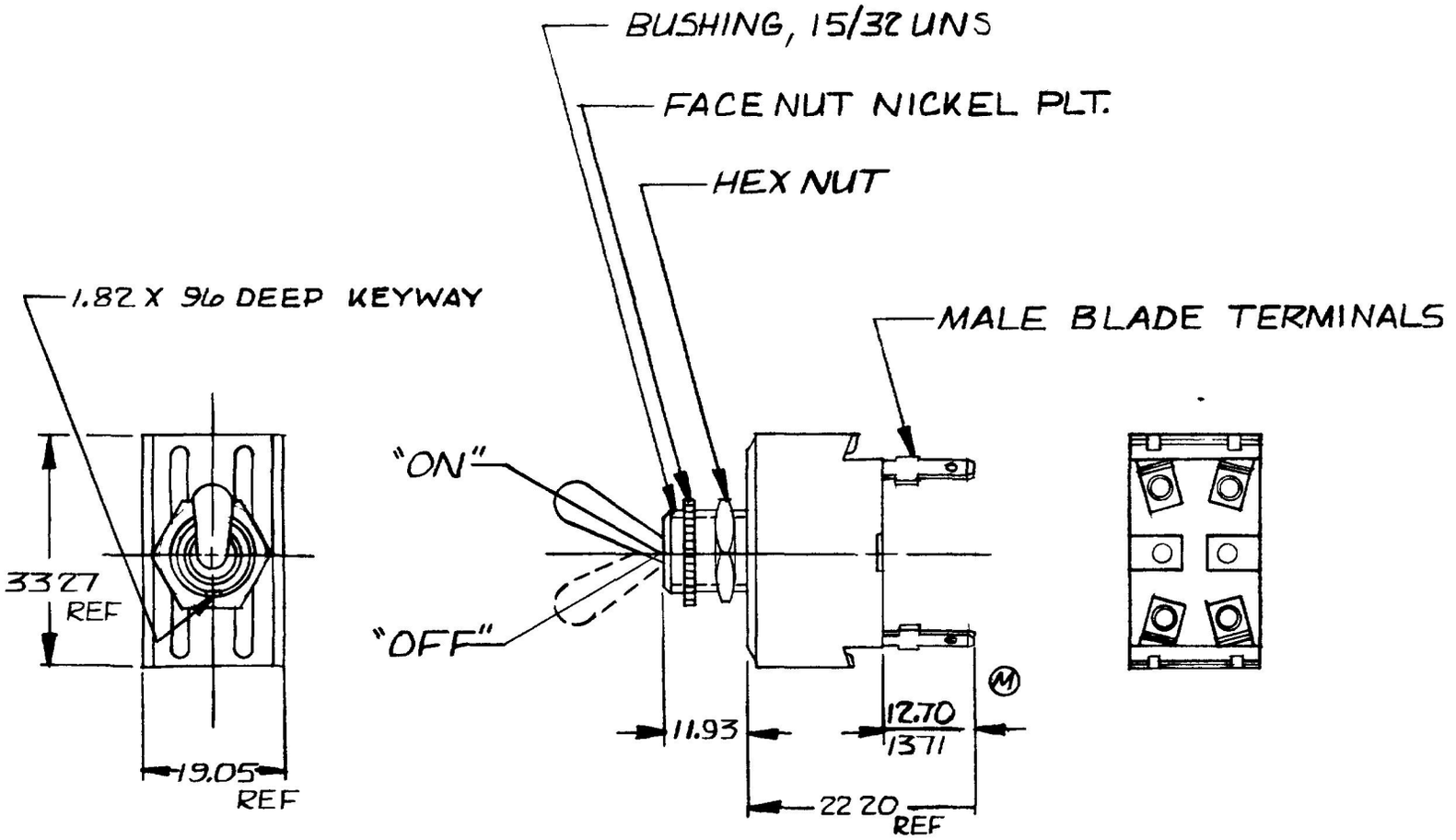

25 AMPS 12VDC

NOTE
M SILVER CONTACT SURFACES

METRIC

DO NOT SCALE

LET	WAS	DATE	BY	LET	WAS	DATE	BY	MATERIAL	DRAWN	CHECKED	APPRV D	SCALE		DATE DRAWN
								//	GS	RJA		1 1		8-21-56
								FINISH	Cole Hersee Co. 20 OLD COLONY AVE SOUTH BOSTON, MA. U.S.A. 02 27					DATE BLUEPRINT
				N	ADD NOTE/ 25432	9/15/93	TH	//						
				M	REV TERMS	1-7-82		TOLERANCES	D.P-S.T. OFF-ON TOGGLE SW.					55017
				L	REV & REDRAWN	4-16-78		DECIMAL ± METRIC ±.25						

CH 188(4 78)

Confidential Property of Cole Hersee