.25	.010
12.70	.500
13.71	.540
17.27	.680
21.08	.830
24.38	.960
26.97	1.062
30.22	1.190
36.83	1.450
40.68	1.601
43.18	1.700

57006-01

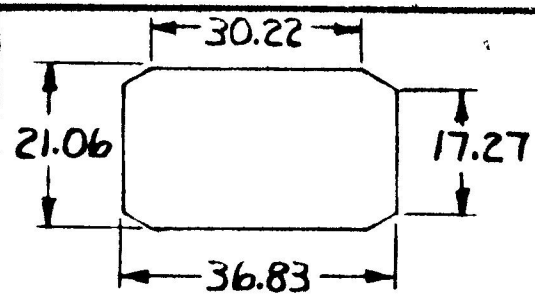

MTG. HOLE DETAIL

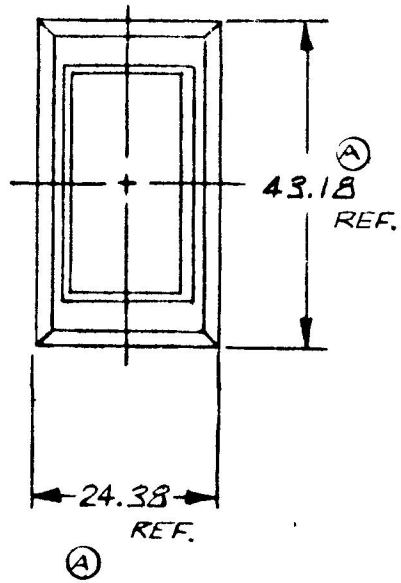

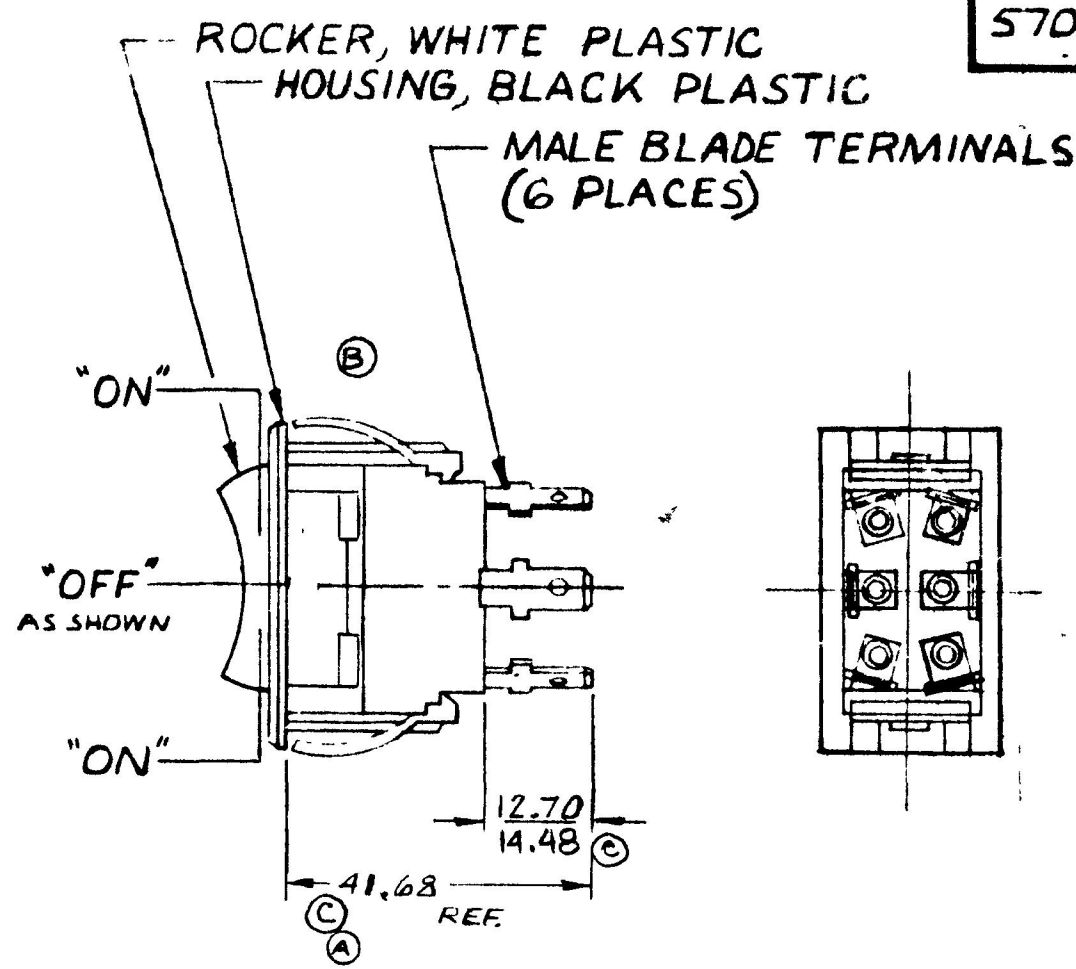

NOTE:

1. WEATHERPROOF
2. SILVER CONTACTS
3. HEAVY DUTY
4. 25 AMPS @ 12 V DC LAMP LOAD

EX 18846-E

METRIC

DO NOT SCALE

LT	WAS	DATE	BY	LET	WAS	DATE	BY
				C	13.71 & 40.68	10-7-94	AF
				B	ECN 23335	12-11-86	ZU
					ISSUED	5-5-81	RJF
				A	REVISED	4-21-81	EA

MATERIAL	DRAWN	CHECKED	APPRV'D	SCALE		DATE DRAWN
—	R	8-22-80		1:1	57006-01 EXCEPT WEATHERPROOF	8-20-80
FINISH —	Cole Hersee Co.					DATE BLUEPRINT
TOLERANCES DECIMAL ± METRIC ±.25	D.P.D.T. ROCKER SWITCH					57006-07

Confidential Property of Cole Hersee