CAD GENERATED DRAWING - NO PENCIL CHANGES ALLOWED (rev C)

PART NUMBER	COVER OPENING	DIMENSION "A"	FUSE	FUSE QTY/1000	SPLIT WASHER	SPLIT WASHER QTY/1000	HEX NUT	HEX NUT QTY/M	RACHET FASTENER	RACHET FASTENER QTY/1000	STYLE	PART No RENAULT
04980908ZXT	E F	10.54	NO	N/A	NO	N/A	NO	N/A	NO	N/A	2	296712452R---

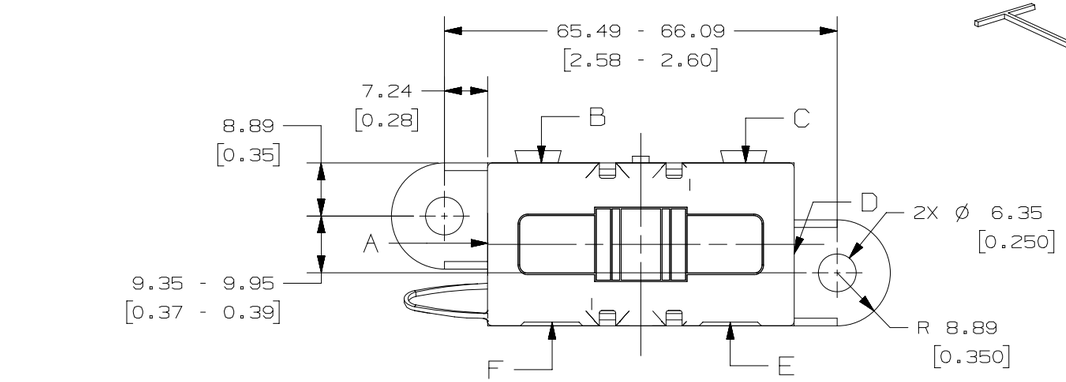

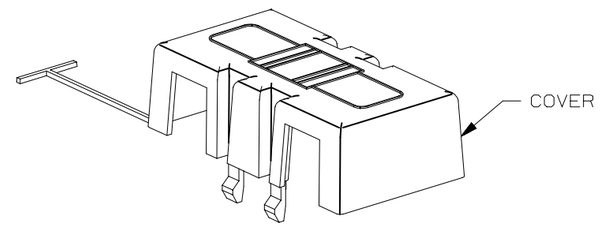

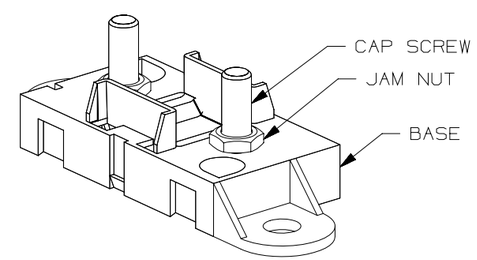

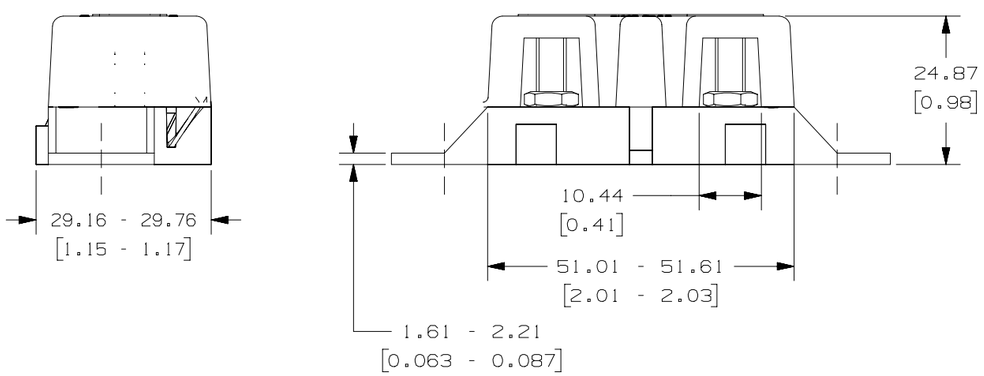

NOTES:

1. MATERIAL:
   * BODY-GLASS FILLED THERMOPLASTIC: COLOR-BLACK
   * COVER-THERMOPLASTIC: COLOR-BLACK
   * HARDWARE-M5 THREADED STUDS & NUTS AND STEEL LOCKWASHER WITH ZINC AND TRIVALENT CHROMATE, LEACHED AND SEALED, INTEGRAL TORQUE CONTROL LUBRICANT FINISH. (MEETS ASTM STANDARD B-117, 96 HR. SALT SPRAY REQUIREMENT).
2. TORQUE REQUIRED FOR MIDI FUSE TERMINAL & CONNECTOR LOCKING NUTS TO BE 4.0-5.0 NEWTON METERS [35-44 IN-LBS]
3. HOLDER MEETS L/F VALIDATION TEST SPEC. VS-005004.
4. PLANT IS ISO 14001 AND ISO TS 16949 CERTIFED.
5. FUSE IS RoHs COMPLIANT.
6. IMDS AVAILABLE.

METRIC
ASSEMBLY

NO	COMPONENT NO	DESCRIPTION	QTY/M	U/M

BILL OF MATERIAL

MATL SPEC -
FINISH -

	DRW	OPL	CHK		APPD	
DATE	03/07/11		DATE		DATE	
SCALE	1:1		SUPER DR		FINSH GOOD WT GRAMS/PIECE	

TOLERANCES UNLESS OTHERWISE SPECIFIED (REF. ISO 2768-mK)

DIMENSION	UP TO 3	OVER 3 UP TO 6	OVER 6 UP TO 30	OVER 30 UP TO 120	OVER 120 UP TO 400
	0.5	±0.1	±0.2	±0.3	±0.5
TOLERANCE	±0.1	±0.1	±0.2	±0.3	±0.5

COPIES TO: 1 9 18, 2 10 19, 3 12 20, 4 13 21, 5 14 23, 6 15 33, 7 16 43, 8 17 53

3RD ANGLE PROJECTION

TITLE MIDIFUSE HOLDER

Littelfuse® CHICAGO, USA 773-628-1000

REVISION B DRWG. NO. 04980908ZXTRN OUTLINE

LTR	DATE	REVISION	CHK	APD
A	03/07/11	501797ERA-RELEASE OPL		
B	08/31/11	504244ECA-IN NOTES ADD NOTES 4, 5 & 6 OPL		

UNLESS OTHERWISE SPECIFIED, DIMENSIONS ARE IN MILLIMETERS. DIMENSIONS IN BRACKETS [ ] ARE INCHES

UNLESS OTHERWISE SPECIFIED, DIMENSIONS DO NOT INCLUDE PLATING.

◎ DENOTES CRITICAL CHARACTERISTICS.

CPK DENOTES CPK DIMENSIONS, -MINIMUM CPK VALUE

ST DENOTES A CHARACTERISTIC THAT PROVIDES AN INDICATION OF PROCESS PERFORMANCE. PROCEDURE FOR MEASUREMENT AND TRACKING TO BE DEFINED IN LITTELFUSE INSPECTION INSTRUCTIONS

CP DENOTES CP DIMENSIONS, -MINIMUM CP VALUE MUST BE WITHIN THE DIMENSIONAL LIMITATIONS SHOWN ON DRAWING AND INITIALLY LOCATED TO ALLOW FOR MAXIMUM TOOL LIFE