THIS DRAWING AND THE INFORMATION CONTAINED WITHIN IT ARE CONFIDENTIAL AND MAY NOT BE COPIED OR DISCLOSED WITHOUT THE WRITTEN PERMISSION OF LITTELFUSE.

CABLE SIZE mm2	FEMALE TERMINAL (DELPHI 280 SEALED)	CABLE DIA.	CABLE SEAL (DELPHI 280 METRI - PACK REEL/LOOSE)	COLOR
0.35 - 0.5	12084201	1.84 - 2.51	12034365 / 15324983	DARK RED
0.5 - 0.8 - 1.0	12077411	2.03-3.12	12089444 / 15324985	PURPLE
2.0 - 3.0	12129493	2.45 - 3.80	12041352 / 15324984	TAN
1.0 - 2.0	15363933	2.03 - 2.85	12015284 / 15324982	GREEN
2.0 - 3.0	12129493	2.45 - 3.80	12015359 / 15324980	GRAY
3	12077413	3.49 - 3.65	12015360 / 15324981	BLUE
		CAVITY PLUG	12010300	GREEN

FEMALE TERMINAL FOR MINI FUSE

PART NUMBER		
PDM21001LXM	1	1
PDM21004LXM	NONE	NONE
	COVER QTY/M	SEAL QTY/M

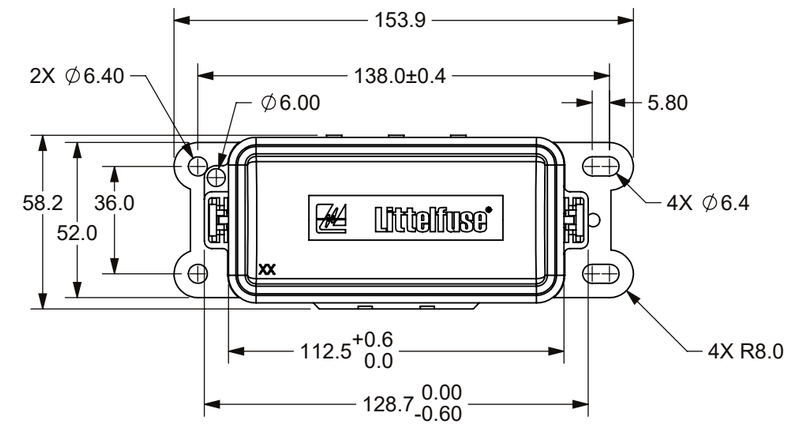

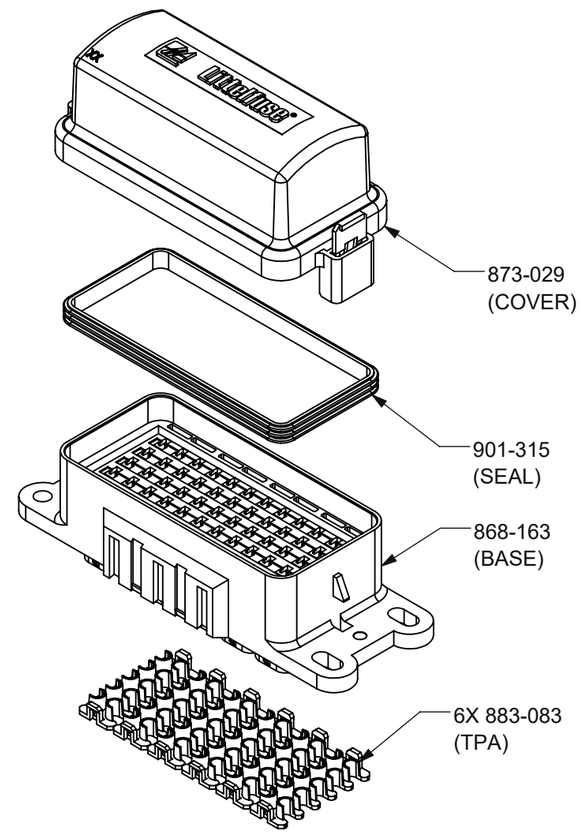

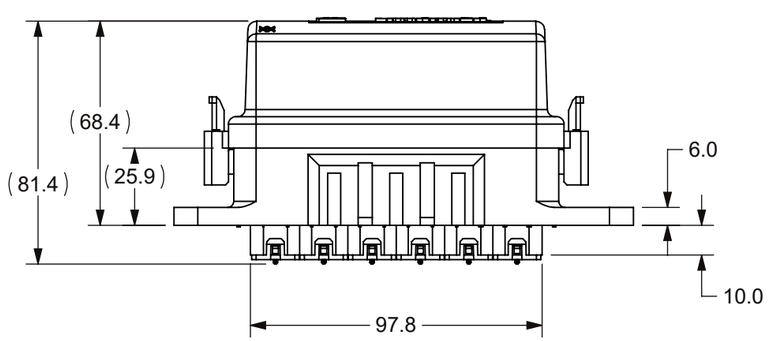

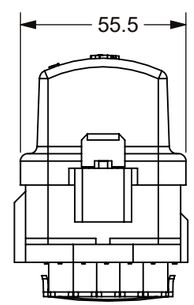

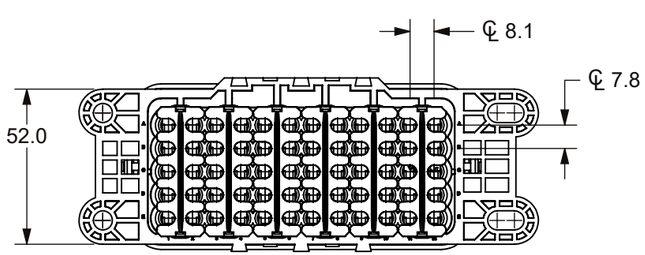

NOTES:
1. MATERIAL:
BASE & COVER: NYLON, BLACK
TPA: PA, BLUE
SEAL: SILICONE RUBBER, GREEN
2. TORQUE RATING (ON FLAT SURFACE): 4-6 Nm USING M6 BOLT & LOCK WASHER.
3. FUSE RATING: 30A PER CIRCUIT.
4.TERMINAL RETENTION PER USCAR 2 SECTION 5.4.1.3 USING PROPER DELPHI METRI-PACK TERMINALS(SEALED / TANGLESS)
5.TPA RETENTION PER USCAR 2 SECTION 5.4.5.4
6. MAXIMUM CONTINUOUS CURRENTS: 250A FOR ENTIRE FUSEHOLDER
7. 60 TERMINAL OPENINGS

REVISIONS

ZONE	REV.	DESCRIPTION	DATE	APPROVED
	K	511349ECA UPDATE DIMENSION 112.5 WAS 113 F.YUE.	12/08/14	
	L	515613ECA - UPDATE DIMENSIONS AND CHANGE TORQUE F.YUE.	03/24/16	
	M	515930ECA - UPDATE IP RATING F.YUE.	05/24/16	
	N	ECO 520021 - UPDATE DIMENSIONS TO MATCH MATAMOROS LITTELFUSE MOLDING PROCESS: 153.9MM (WAS 154.5), 58.2MM (WAS 58.4), 68.5MM (WAS 68.4), 81.5MM (WAS 81.4). ADD DIA 6.0MM, ADD FEMALE TERMINAL PART NO. REMOVE OPERATION & STORAGE TEMPERATURE (WAS -40 C TO 125 C). REDRAWN CAD IN SOLIDWORKS USING NEW CVP DRAWING FORMAT & TOLERANCE . AHOANG	10/26/18	A. JOZWIAK
	P	ECR 524571 - CORRECT FEMALE CONNECTOR TABLE AND NOTES UPDATE IN MATERIAL AND SPEC. E. FLORES	03/02/2022	L. ARGIL

NO	COMPONENT NO.	DESCRIPTION	QTY/M	U/M
4	883-083	TPA	6	EA
3	901-315	SEAL	SEECHART	EA
2	873-029	COVER	SEE CHART	EA
1	868-163	BASE	1	EA

BILL OF MATERIAL

TOLERANCES UNLESS OTHERWISE SPECIFIED (REF. ISO 2768-mK)

.5 to 3	>3 to 6	>6 to 30	>30 to 120	>120 to 400								ANGLE
±0.10	±0.10	±0.20	±0.30	±0.50								NONE

DIMENSIONS ARE SHOWN IN MILLIMETERS. DIMENSIONS AND TOLERANCES ARE DEFINED ACCORDING TO ANSI/ASME Y14.5-1994.

PER CHI-NPD20-0008 PROCEDURE

●	FIT/ FUNCTION CRITICAL CHARACTERISTICS
<S>	SAFETY/ COMPLIANCE CRITICAL CHARACTERISTICS SYMBOL
CPK	DENOTES CPK DIMENSIONS MINIMUM CPK VALUE
⟨ST⟩	DENOTES A CHARACTERISTIC THAT PROVIDES AN INDICATION OF PROCESS PERFORMANCE.PROCEDURE FOR MEASUREMENTAND TRACKINGTO BE DEFINED IN LITTELFUSE INSPECTION INSTRUCTIONS
CP	DENOTES CP DIMENSIONS, -MINIMUM CP VALUE MUST BE WITHIN THE DIMENSIONAL LIMITATIONS SHOWN ON DRAWING AND INITIALLY LOCATED TO ALLOW FOR MAXIMUM TOOL LIFE

	NAME	DATE
DRAWN	GMB	11/08/10
CHECKED		
	-	-
	-	-

FORM NO: CVP-PE40-0003 REV B

THIRD ANGLE PROJECTION

DO NOT SCALE DRAWING

Littelfuse®
Expertise Applied | Answers Delivered

TITLE
HWB60 WITH TPAs BULK

SIZE B | DWG. NO. OUTLINE OL-PDM21001LXM | REV. P

SCALE 1:1 | SHEET 1 OF 1