THIS DRAWING AND THE INFORMATION CONTAINED WITHIN IT ARE CONFIDENTIAL AND MAY NOT BE COPIED OR DISCLOSED WITHOUT THE WRITTEN PERMISSION OF LITTELFUSE.

REVISIONS				
ZONE	REV.	DESCRIPTION	DATE	APPROVED
	A	PCO5300241- INITIAL RELEASE	15/FEB/2023	Du.C

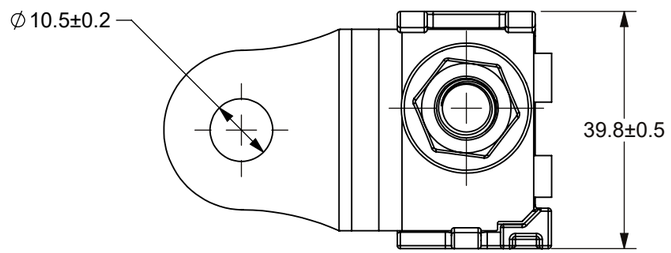

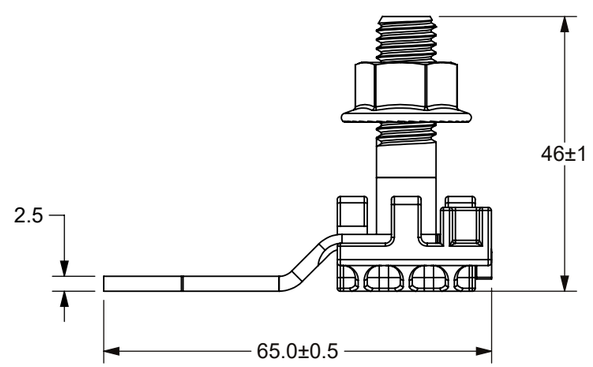

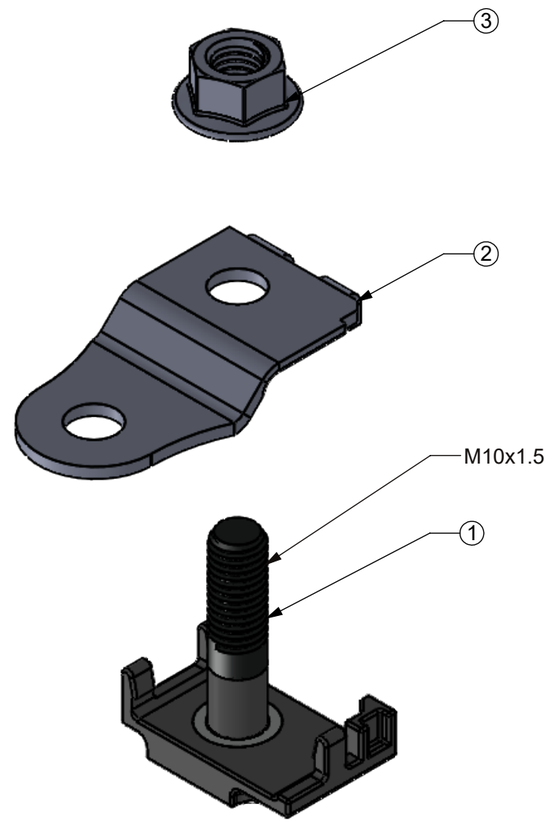

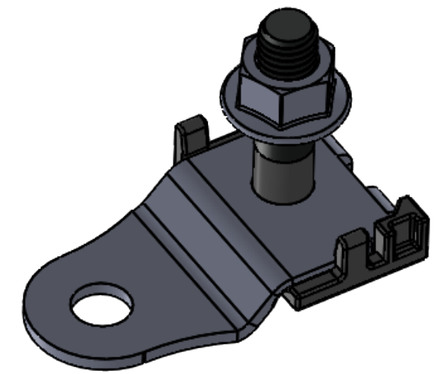

NO.	COMPONENT NAME	QTY.
3	M10 FLANGE NUT	1
2	BUSBAR	1
1	BASE	1

LIMIT DIMENSIONS OF PLASTIC MOLDED PARTS FOR NOMINAL SIZE RANGES PER ISO IN LITTELFUSE CVP-NPD20-0002, DIMENSIONS mm

1 to 3	>3 to 6	>6 to 10	>10 to 18	>18 to 30	>30 to 50	>50 to 80	>80 to 120	>120 to 180	>180 to 250	>250 to 315	>315 to 400	ANGLE
±0.08	±0.11	±0.14	±0.17	±0.20	±0.23	±0.36	±0.50	±0.58	±0.65	±0.70	±0.78	NONE

SURFACE PROFILE DIMENSIONS OF PLASTIC MOLDED PARTS FOR NOMINAL SIZE RANGES PER ISO IN LITTELFUSE CVP-NPD20-0002, DIMENSIONS MM

0.50	0.50	0.50	0.50	0.50	0.50	0.50	0.50	1.0	2.0	4.0	4.0	

DIMENSIONS ARE SHOWN IN MILLIMETERS. DIMENSIONS AND TOLERANCES ARE DEFINED ACCORDING TO ANSI/ASME Y14.5-1994.

PER CHI-NPD20-0008 PROCEDURE

●	FIT/ FUNCTION CRITICAL CHARACTERISTICS
<S>	SAFETY/ COMPLIANCE CRITICAL CHARACTERISTICS SYMBOL
CPK	DENOTES CPK DIMENSIONS MINIMUM CPK VALUE
⟨ST⟩	DENOTES A CHARACTERISTIC THAT PROVIDES AN INDICATION OF PROCESS PERFORMANCE.PROCEDURE FOR MEASUREMENTAND TRACKINGTO BE DEFINED IN LITTELFUSE INSPECTION INSTRUCTIONS
CP	DENOTES CP DIMENSIONS, -MINIMUM CP VALUE MUST BE WITHIN THE DIMENSIONAL LIMITATIONS SHOWN ON DRAWING AND INITIALLY LOCATED TO ALLOW FOR MAXIMUM TOOL LIFE

	NAME	DATE
DRAWN	Rex.L	15/FEB/2022
CHECKED	Du.C	15/FEB/2022
	-	-
	-	-

FORM NO: CVP-PE40-0003 REV B

THIRD ANGLE PROJECTION

DO NOT SCALE DRAWING

Littelfuse

Expertise Applied | Answers Delivered

TITLE

SMZ M10 FUSE HOLDER

SIZE B | DWG. NO. OUTLINE OL-0FHZ0241Z | REV. A

SCALE 1:1 | SHEET 1 OF 1

NOTES:

1. MATERIAL:
   BASE: PA66-GF25, UL94-V0
   STUD: CARBON STEEL(ZINC-NICKEL PLATING)
   BUSBAR: COPPER C110, TIN PLATED
   NUT: STAINLESS STEEL
2. OPERATING TEMPERATURE RANGE:-40°C TO +105°C
3. MAX CONTINUOUS CURRENT: 400A
4. MAX VOLTAGE: 80V
5. RECOMMENDED M10 MOUNTING TORQUE: 18±2 N-m
6. LF P/N: 0FHZ0241Z