90030-53

MM	IN
1.77	0.070
9.65	0.380
11.17	0.440
16.00	0.630
27.63	1.088
28.44	1.120
50.29	1.980

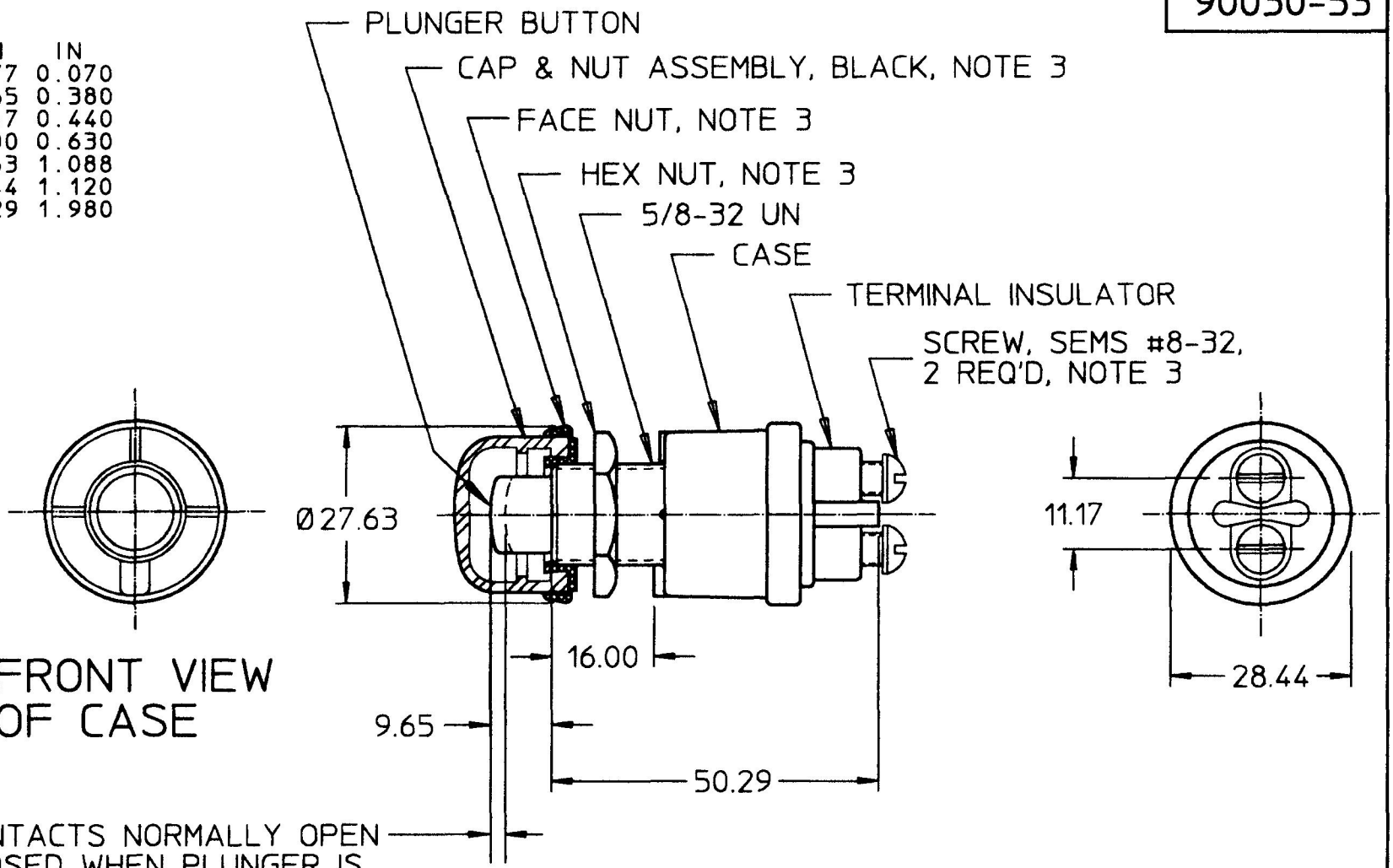

FRONT VIEW OF CASE

CONTACTS NORMALLY OPEN CLOSED WHEN PLUNGER IS DEPRESSED 1.77 APPROX. AND THRU REMAINDER OF TRAVEL

METRIC

35 AMPS	12 VDC
20 AMPS	24 VDC
CURRENT RATING	

NOTES:
1. ALL STEEL PARTS PLATED
2. SILVER CONTACT SURFACES
3. HARDWARE ASSEMBLED

DO NOT SCALE

LET.	WAS	DATE	BY	LET.	WAS	DATE	BY	MATERIAL	DRAWN	CHK	APVD	SCALE		DATE DRAWN
									AJS	JMP	AF	1:1		8/15/97
								FINISH	Cole Hersee Co. 20 OLD COLONY AVENUE, BOSTON, MA., U.S.A., 02127					DATE BLUEPRINTED
								TOLERANCES DECIMAL ± ANGLE ±	SW, P-P, MOM, N.O.					90030-53
					ISSUED	8/27/97	AF							

Confidential Property of Cole Hersee