CAD GENERATED DRAWING - NO PENCIL CHANGES ALLOWED

PART NUMBER	COVER OPENINGS
04980918ZXT	D F

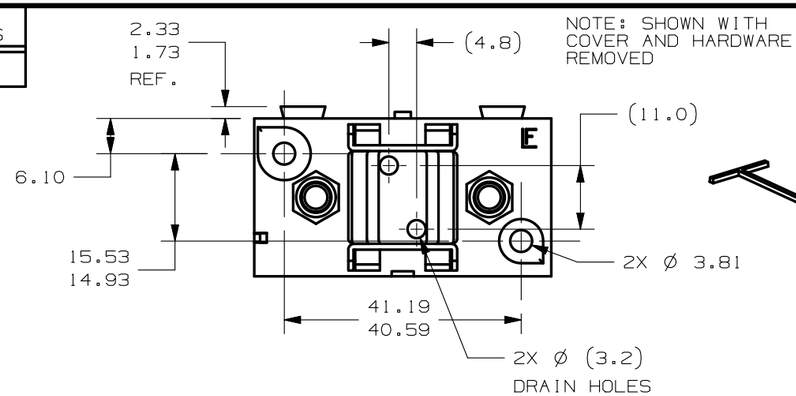

NOTE: SHOWN WITH COVER AND HARDWARE REMOVED

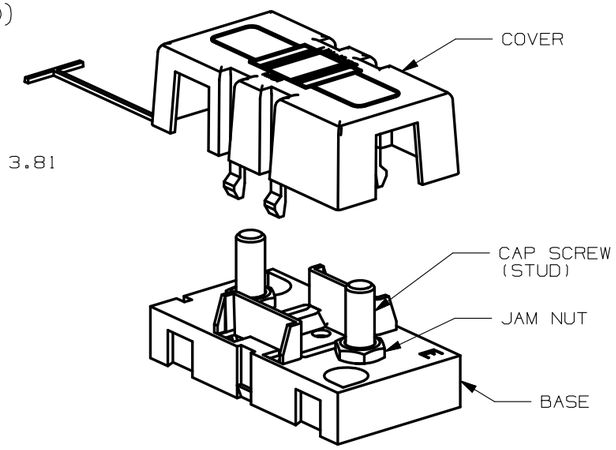

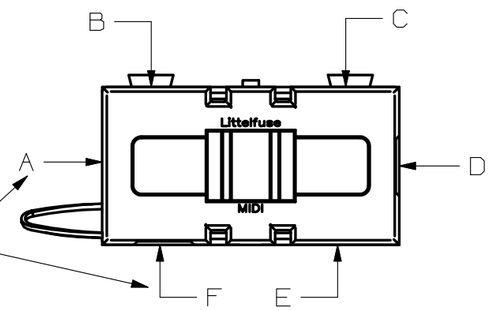

LETTER DESIGNATIONS REFER TO POSITIONS OF AVAILABLE COVER OPENINGS. (SEE CHART)

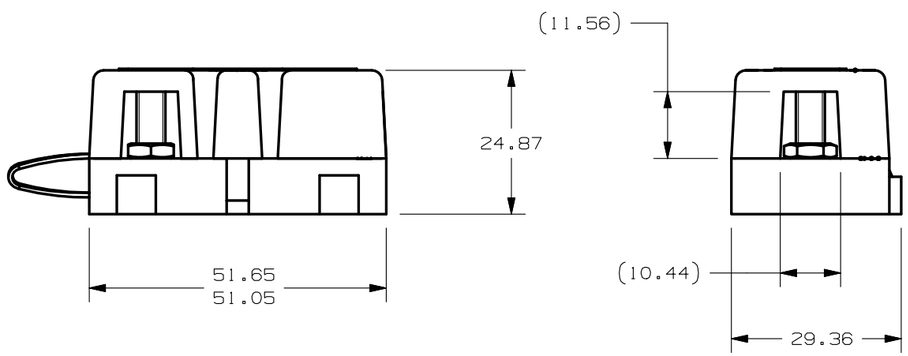

NOTES:

1. TAB OF COVER TIE IS INSERTED INTO HOLE IN BASE.
2. TORQUE REQUIRED FOR JAM NUT TO BE 2.3 - 2.8 NEWTON METERS.
3. MAX TORQUE ON TOP NUT (NOT SUPPLIED) TO BE 5.0 NEWTON METERS.
4. HOLDER MEETS L/F VALIDATION SPECIFICATION VS-005004.
5. CAP SCREWS AND NUTS - M5 X 0.8 STEEL, ZINC PLATED WITH TRIVALENT CHROMATE LEACHED AND SEALED, INTEGRAL TORQUE CONTROL LUBRICANT FINISH (MEETS 96 HR. ASTM STD. B-117 SALT SPRAY REQ.).

METRIC

NO	COMPONENT NO	DESCRIPTION	QTY/M	U/M

BILL OF MATERIAL

MATL SPEC

FINISH

COPIES TO: 1 9 18 / 2 10 19 / 3 12 20 / 4 13 21 / 5 14 23 / 6 15 33 / 7 16 43 / 8 17 53

DRW	GMB	DATE 11/09/09	SCALE 1:1
CHK		DATE	SUPER DR
APPD		DATE	FINSH GOOD WT GRAMS/PIECE

TOLERANCES UNLESS OTHERWISE SPECIFIED (REF. ISO 2768-mK)

	UP TO 3	OVER 3 - UP TO 6	OVER 6 - UP TO 30	OVER 30 - UP TO 120	OVER 120 - UP TO 400
DIMENSION	0.5 - 3				
TOLERANCE	±0.1	±0.1	±0.2	±0.3	±0.5

3RD ANGLE PROJECTION

TITLE: MIDI FUSE HOLDER

Littelfuse® DES PLAINES, ILLINOIS 60016

REVISION: A — DRWG. NO. OL-04980918ZXT — OUTLINE

LTR	DATE	REVISION	CHK	APD
A	11/09/09	000842ER-RELEASE GMB		

UNLESS OTHERWISE SPECIFIED, DIMENSIONS ARE IN MILLIMETERS.
DIMENSIONS IN BRACKETS [ ] ARE INCHES
UNLESS OTHERWISE SPECIFIED, DIMENSIONS DO NOT INCLUDE PLATING.

◎ DENOTES CRITICAL CHARACTERISTICS.

CPK — DENOTES CPK DIMENSIONS, -MINIMUM CPK VALUE

ST — DENOTES A CHARACTERISTIC THAT PROVIDES AN INDICATION OF PROCESS PERFORMANCE. PROCEDURE FOR MEASUREMENT AND TRACKING TO BE DEFINED IN LITTELFUSE INSPECTION INSTRUCTIONS

CP — DENOTES CP DIMENSIONS, -MINIMUM CP VALUE MUST BE WITHIN THE DIMENSIONAL LIMITATIONS SHOWN ON DRAWING AND INITIALLY LOCATED TO ALLOW FOR MAXIMUM TOOL LIFE