THIS DRAWING AND THE INFORMATION CONTAINED WITHIN IT ARE CONFIDENTIAL AND MAY NOT BE COPIED OR DISCLOSED WITHOUT THE WRITTEN PERMISSION OF LITTELFUSE.

REVISIONS				
ZONE	REV.	DESCRIPTION	DATE	APPROVED
	A	INITIAL RELEASE. GCF 500000021760	12/16/2019	DGK

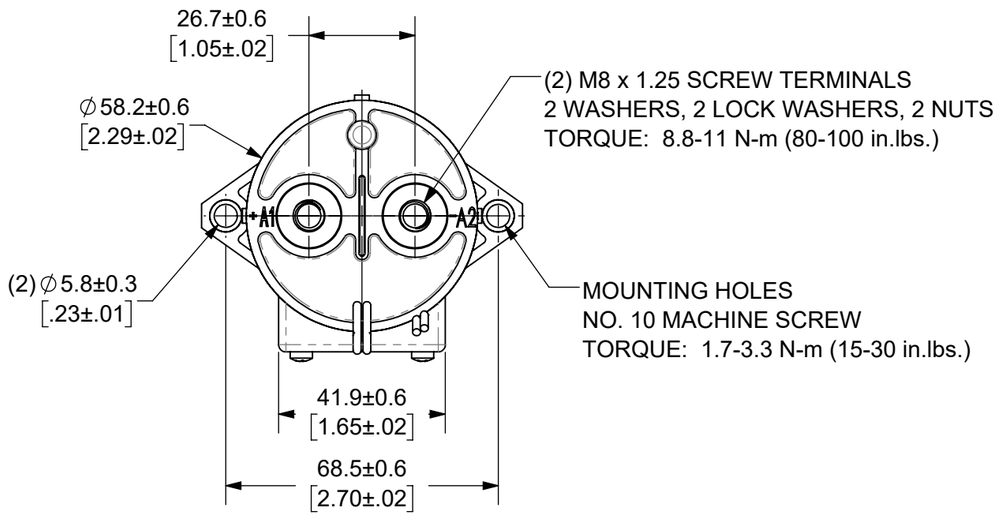

NOTES: UNLESS OTHERWISE SPECIFIED

1. CONTACT ARRANGEMENT: SPST-NO
2. CONTINUOUS CURRENT RATING: 250 AMPS
3. CONTACT VOLTAGE RATING: 12 - 900 VDC
4. CONTACT TERMINALS POLARIZED
5. HARDWARE: 2 - M8 NUTS, 2 - M8 LOCKWASHERS, 2 - M8 FLAT WASHERS
6. WEIGHT: 430 GRAMS (15 OZ.)
7. CERTIFICATIONS: c UL us CE

   UL RECOGNIZED FOR CANADA AND THE UNITIED STATES.
   EUROPEAN ECONOMIC AREA RECOGNIZED.
8. RoHS COMPLIANT

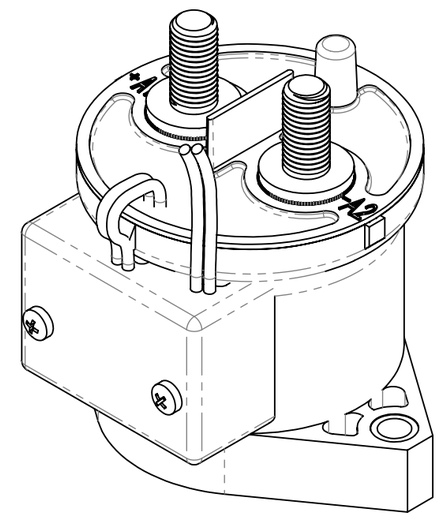

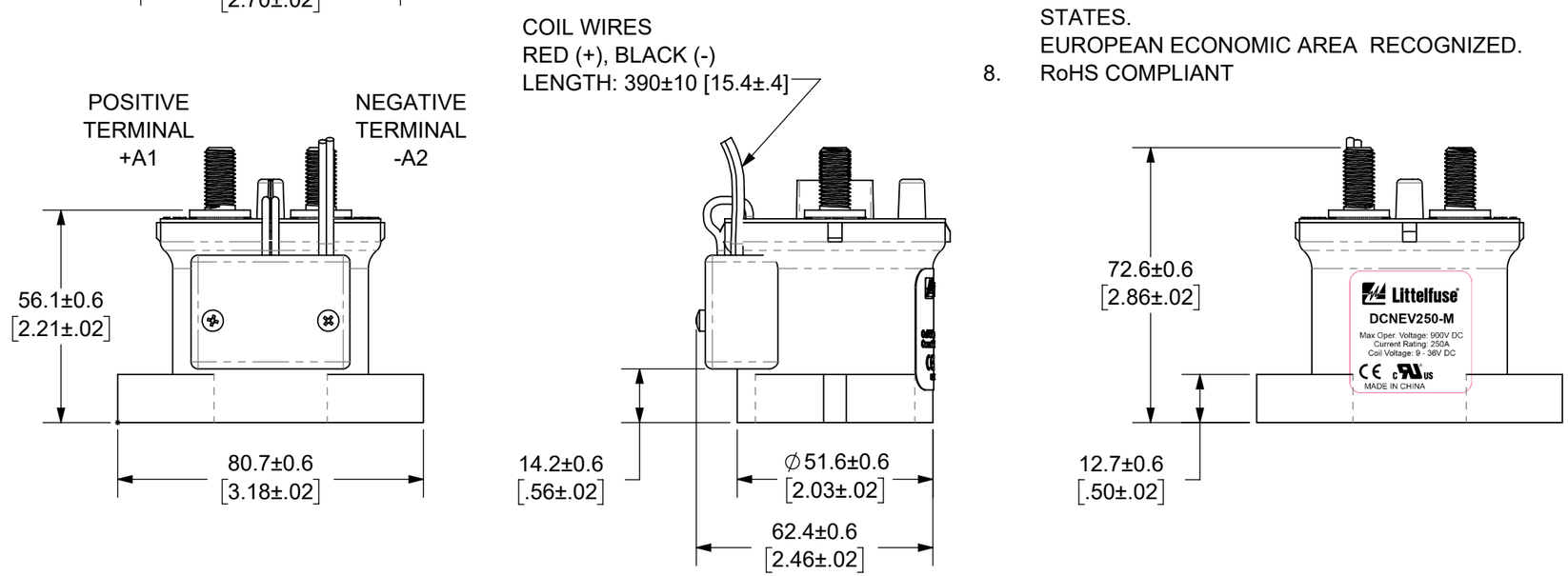

ENGINEERING DESIGN DATA									
COIL DATA							SHORT CIRCUIT	DIELECTRIC VOLTAGE	ELECTRICAL LIFE
COIL VOLTAGE (VDC)	NOMINAL POWER (WATTS)	PICK-UP VOLTAGE (VDC)	DROP-OUT VOLTAGE (VDC)	MAX. VOLTAGE (VDC)	INRUSH CURRENT (MAX)	HOLDING CURRENT	MAX @ 320 VDC	(VRMS)	250A @ 450VDC (CYCLES)
12-24	1.7	9	6	36	3.8A	0.13A@12VDC 0.07A@24VDC	2,000 A	2,200	5,000

INTERPRET DRAWING TO ANSI/ASME Y14.5-1994.	
●	FIT/ FUNCTION CRITICAL CHARACTERISTICS SYMBOL
<S>	SAFETY/ COMPLIANCE CRITICAL CHARACTERISTICS SYMBOL
CPK	DENOTES CPK DIMENSIONS MINIMUM CPK VALUE
⟨ST⟩	DENOTES A CHARACTERISTIC THAT PROVIDES AN INDICATION OF PROCESS PERFORMANCE.PROCEDURE FOR MEASUREMENTAND TRACKINGTO BE DEFINED IN LITTELFUSE INSPECTION INSTRUCTIONS
CP	DENOTES CP DIMENSIONS, -MINIMUM CP VALUE MUST BE WITHIN THE DIMENSIONAL LIMITATIONS SHOWN ON DRAWING AND INITIALLY LOCATED TO ALLOW FOR MAXIMUM TOOL LIFE

DIMENSION; MM TOLERANCES UNLESS OTHERWISE SPECIFIED
ONE PLACE DECIMAL ± 0.5 THREE PLACES DECIMAL ± 0.100
TWO PLACES DECIMAL ± 0.20 ANGULAR ± 2°

	NAME	DATE
DRAWN	DGK	11/25/2019
CHECKED	AH	12/13/2019
	-	-
	-	-

FORM NO: CVP-PE40-0004 REV A

THIRD ANGLE PROJECTION

DO NOT SCALE DRAWING

Littelfuse®
Expertise Applied | Answers Delivered

TITLE
DC CONTACTOR, 250 AMP
12-24 VDC

SIZE	DWG. NO.	REV.
B	OL-DCNEV250-M (OUTLINE)	A

SCALE 2:3 SHEET 1 OF 1