LTR	DATE	REVISION		CHK	APD
A	06/16/10	SA340-RELEASE	OPL		

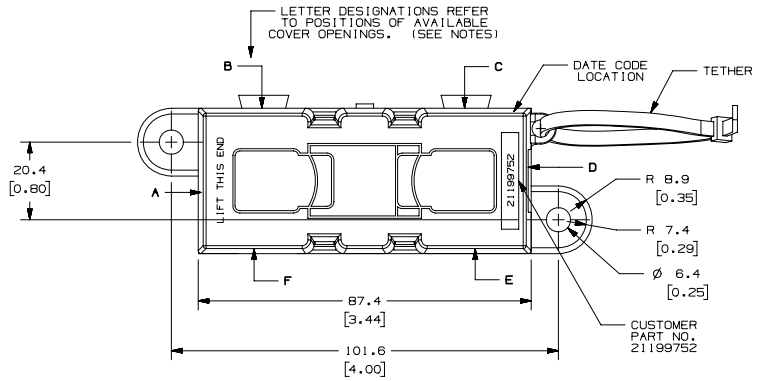

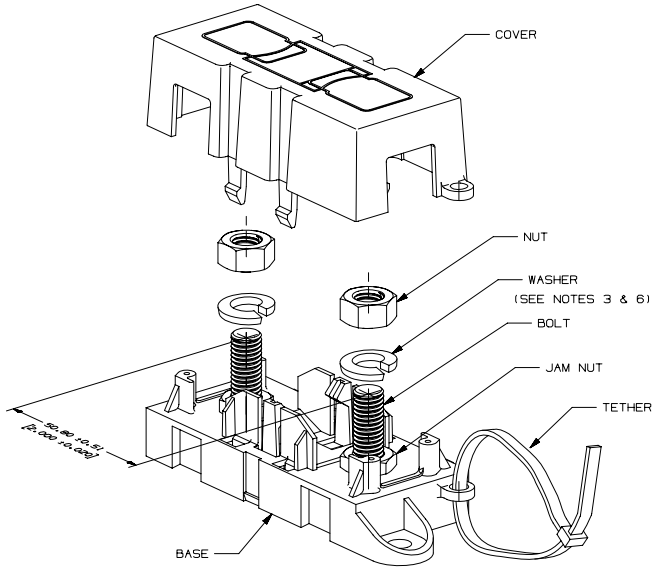

GENERAL HOLDER CONSTRUCTION
(REF ONLY)

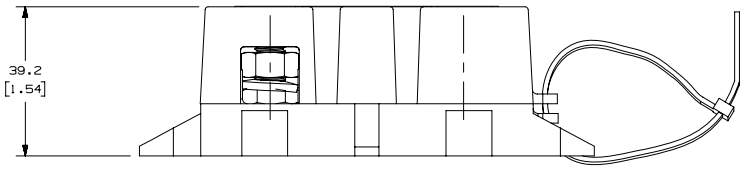

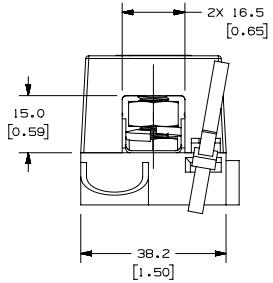

NOTE:

1. THIS VERSION WITH D & F COVER OPENINGS.
2. NO FUSE AVAILABLE FOR THIS PART NUMBER.
3. NUTS TO BE ASSEMBLED BELOW STUD END NOT MORE THAN FINGERTIGHT WASHERS & HEX NUTS NOT TO BE ASSEMBLED TO BASE.
4. COVER RETENTION TEST: MINIMUM FORCE OF 2 LBS. REQUIRED TO REMOVE COVER WHEN IT IS SUSPENDED UPSIDE DOWN. FORCE SHALL BE APPLIED THROUGH THE INNER HOLES (2) IN BASE. USE FIXTURE #T-C403 TO SUPPORT PART.
5. MATERIALS:
   - BODY - GLASS FILLED THERMOPLASTIC
     COLOR - BLACK
   - COVER - THERMOPLASTIC
     COLOR - BLACK
   - WIRE TIE - THERMOPLASTIC
     COLOR - BLACK
   - STUDS & NUTS - M8 X 1.25 STEEL
     LOCKWASHERS ARE ZINC PLATED WITH TRIVALENT CHROMATE.
     LEACHED & SEALED, INTEGRAL TORQUE CONTROL LUBRICANT FINISH.
     (MEETS 96 HR. ASTM STD. B-117 SALT SPRAY REQ.)
6. TORQUE REQUIREMENTS FOR THE HEX NUT USED TO SECURE THE CUSTOMER RING TERMINAL TO THE MEGA FUSE TO BE: 8mm NUT - 12-18 NEWTON METERS [106-159 IN-LBS]

   THIS TORQUE IS NOT APPLIED IN THE FACTORY.
7. HOLDER MEETS L/F VALIDATION TEST SPEC. VS-005002.
8. HOLDER MOUNTING TORQUE - 5 NEWTON METERS (44 IN-LBS) MAX.

METRIC
ASSEMBLY

NO	COMPONENT NO	DESCRIPTION	QTY/M	U/M
-				
-				
-				

BILL OF MATERIAL

UNLESS OTHERWISE SPECIFIED, DIMENSIONS ARE IN MILLIMETERS. DIMENSIONS IN BRACKETS [ ] ARE INCHES

UNLESS OTHERWISE SPECIFIED, DIMENSIONS DO NOT INCLUDE PLATING.

◎	DENOTES CRITICAL CHARACTERISTICS.
CPK	DENOTES CPK DIMENSIONS, -MINIMUM CPK VALUE
ST	DENOTES A CHARACTERISTIC THAT PROVIDES AN INDICATION OF PROCESS PERFORMANCE. PROCEDURE FOR MEASUREMENT AND TRACKING TO BE DEFINED IN LITTELFUSE INSPECTION INSTRUCTIONS
CP	DENOTES CP DIMENSIONS. -MINIMUM CP VALUE MUST BE WITHIN THE DIMENSIONAL LIMITATIONS SHOWN ON DRAWING AND INITIALLY LOCATED TO ALLOW FOR MAXIMUM TOOL LIFE

C

COPIES TO: 1 9 18 / 2 10 19 / 3 12 20 / 4 13 21 / 5 14 23 / 6 15 33 / 7 16 43 / 8 17 53

MATL SPEC -		
FINISH -		
DRW OPL	DATE 06/16/10	SCALE FULL
CHK	DATE	SUPER DR
APPD	DATE	FINSH GOOD WT GRAMS/PIECE

TOLERANCES UNLESS OTHERWISE SPECIFIED (REF. ISO 2768-mK)

DIMENSION	0.5 - 3 (UP TO)	3 - 6 (OVER / UP TO)	6 - 30 (OVER / UP TO)	30 - 120 (OVER / UP TO)	120 - 400 (OVER / UP TO)
TOLERANCE	±0.1	±0.1	±0.2	±0.3	±0.5

3RD ANGLE PROJECTION

TITLE: MEGAFUSE HOLDER

Littelfuse
DES PLAINES, ILLINOIS 60016

REVISION: A

DRWG. NO. 02981033ZXT.V3P

OUTLINE SERIES

CAD GENERATED DRAWING - NO PENCIL CHANGES ALLOWED