CAD GENERATED DRAWING - NO PENCIL CHANGES ALLOWED

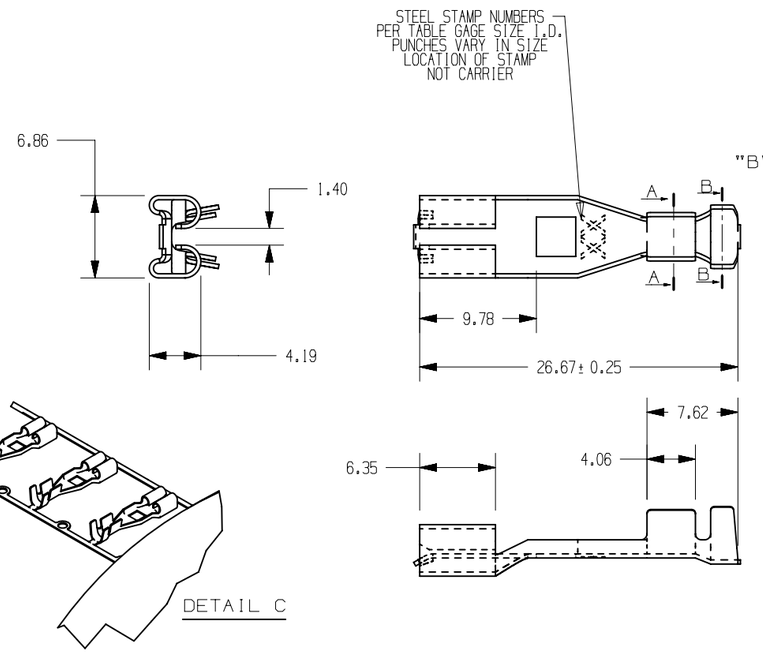

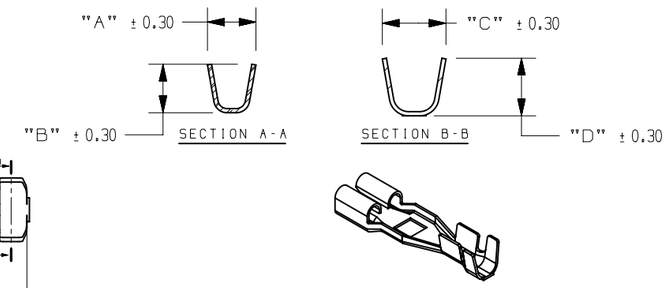

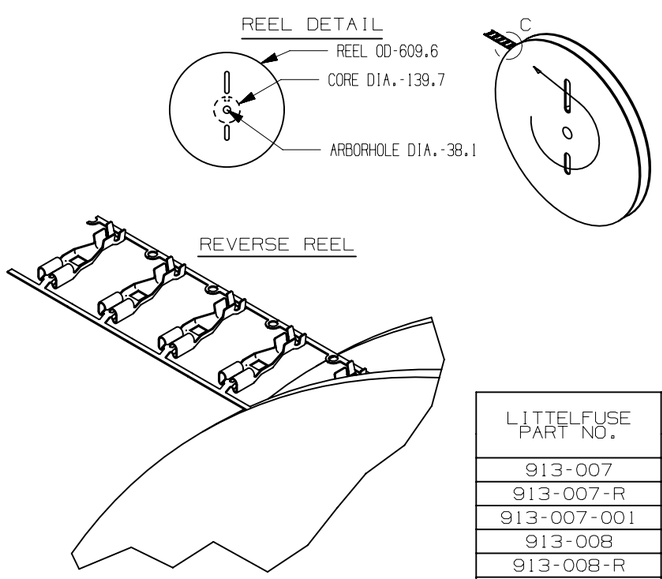

NOTE:
1.MATERIAL: C2300 BRASS T:0.35mm,TIN PLATED
2.EVERY REEL QUANTITY: 2000± 10PCS (ROLL BAND)

UNLESS OTHERWISE SPECIFIED
DIMENSIONS ARE IN mm
TOLERANCE
DECIMALS ANGULAR
X±0.25 ±1°
XX±0.13
DO NOT SCALE DRAWING

LITTELFUSE PART NO.	REELED	REVERSE REEL	WIRE GAGE	INTERLEAF	GRIP TYPE			
					A	B	C	D
913-007	YES	NO	10	YES	5.08	5.08	7.11	6.10
913-007-R	YES	YES	10	YES	5.08	5.08	7.11	6.10
913-007-001	NO	NO	10	NO	5.08	5.08	7.11	6.10
913-008	YES	NO	14	YES	4.06	4.06	5.33	4.83
913-008-R	YES	YES	14	YES	4.06	4.06	5.33	4.83
913-008-001	NO	NO	14	NO	4.06	4.06	5.33	4.83

METRIC
COMPONENT

BILL OF MATERIAL

NO	COMPONENT NO	DESCRIPTION	QTY/M	U/M

UNLESS OTHERWISE SPECIFIED, DIMENSIONS ARE IN MILLIMETERS.
DIMENSIONS IN BRACKETS [ ] ARE INCHES
UNLESS OTHERWISE SPECIFIED, DIMENSIONS DO NOT INCLUDE PLATING.

◎ DENOTES CRITICAL CHARACTERISTICS.
CPK DENOTES CPK DIMENSIONS, -MINIMUM CPK VALUE
ST DENOTES A CHARACTERISTIC THAT PROVIDES AN INDICATION OF PROCESS PERFORMANCE. PROCEDURE FOR MEASUREMENT AND TRACKING TO BE DEFINED IN LITTELFUSE INSPECTION INSTRUCTIONS
CP DENOTES CP DIMENSIONS, -MINIMUM CP VALUE MUST BE WITHIN THE DIMENSIONAL LIMITATIONS SHOWN ON DRAWING AND INITIALLY LOCATED TO ALLOW FOR MAXIMUM TOOL LIFE

MATL SPEC SEE NOTE
FINISH SEE NOTE
DRW EJIN DATE 12/12/11
CHK DATE
APPD DATE
SCALE 2:1
SUPER DR
FINSH GOOD WT GRAMS/PIECE

COPIES TO 1 9 18 2 10 19 3 12 20 4 13 21 5 14 23 6 15 33 7 16 43 8 17 53

TOLERANCES UNLESS OTHERWISE SPECIFIED (REF. ISO 2768-fH)

DIMENSION	UP TO 3	OVER 3 UP TO 6	OVER 6 UP TO 30	OVER 30 UP TO 120	OVER 120 UP TO 400
TOLERANCE	0.5				

3RD ANGLE PROJECTION

TITLE CRIMP TERMINAL WITH INSULAION GRIP

Littelfuse® DES PLAINES, ILLINOIS 60016

REVISION D DRWG. NO. OL-913-007 OUTLINE

LTR	DATE	REVISION	CHK	APD
A	12/12/11	503915ERA NEW RELEASED EJIN		
B	08/17/12	505864ECA-SEE ECO FYUE		
C	10/26/12	506401ERA-RELEASE 913-007-001 AND 913-008-001 FYUE		
D	01/22/14	509992ERA-RELEASE 913-007-R AND 913-008-R FYUE		