7784

MM	IN
.16	[illegible]
4.32	.170
4.82	190
5.58	220
9.14	360
10.16	400
10.66	.420
16.00	.630
18.28	.720
19.55	.770
22.09	.870
22.35	.880
22.86	.900
24.89	980
26.79	1.055
27.05	1.065
31.75	1.250
36.06	1.420
41.91	1.650
42.67	1.680
44.19	1.740
44.70	1.760
63.24	2.490
63.75	2.510

COLE-HERSEE CO.

NPM 6-6-77

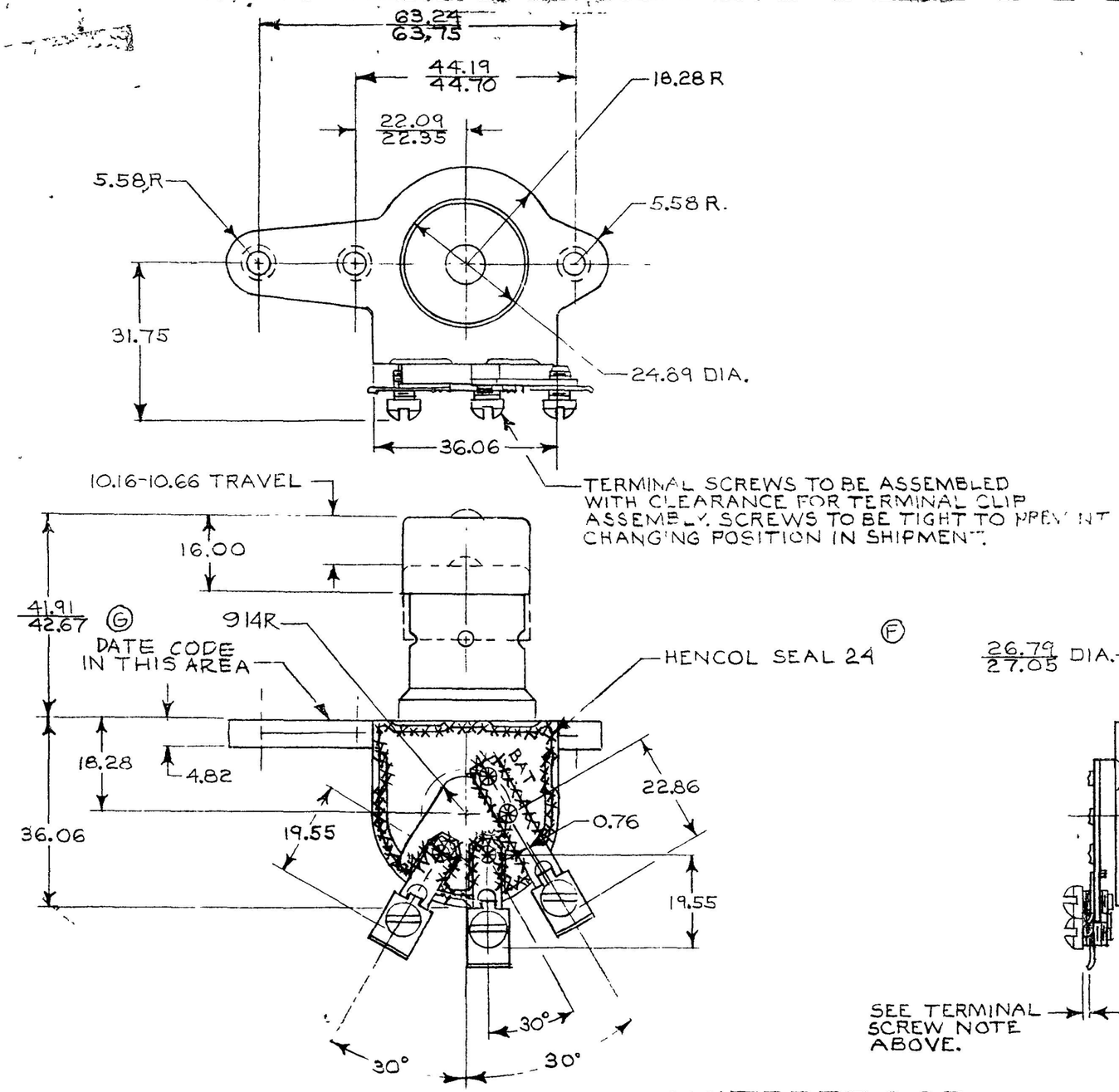

CASE, ZINC DIE CAST, DICHROMATED
TERMINALS, STEEL, ZINC PLT.
BUTTON, STEEL, ZINC PLT.
CONTACTOR, COPPER CADMIUM

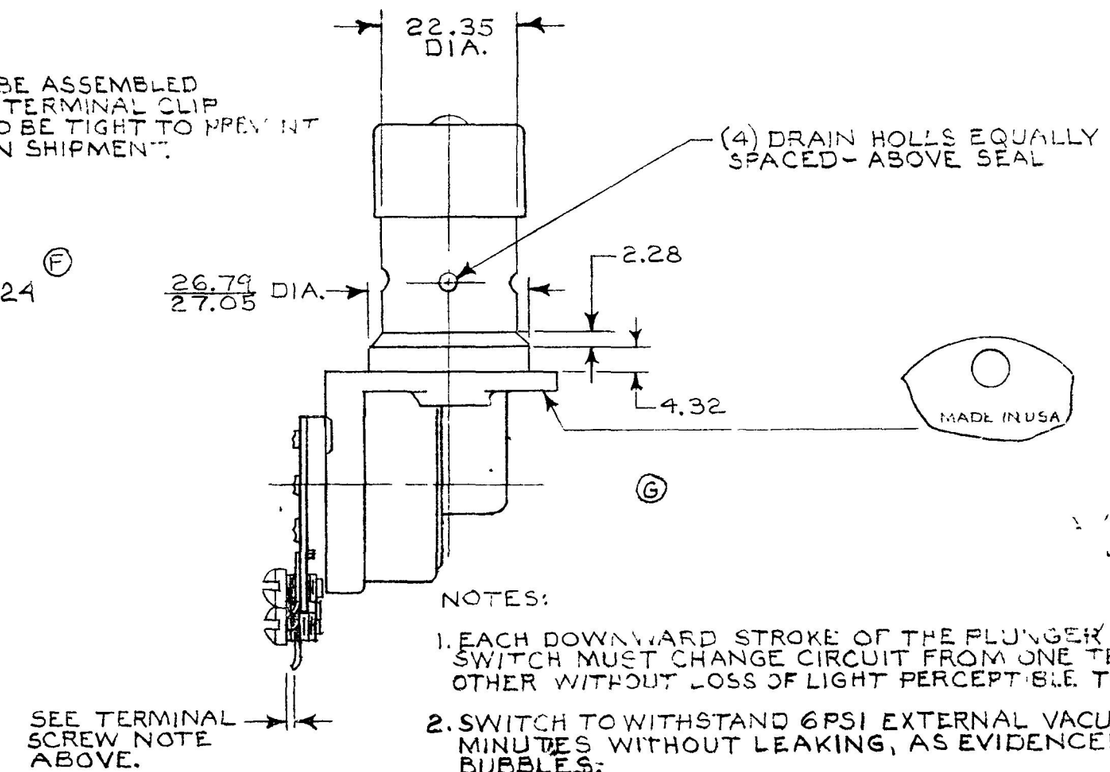

NOTES:

1. EACH DOWNWARD STROKE OF THE PLUNGER SHIFTS BEAMS, SWITCH MUST CHANGE CIRCUIT FROM ONE TERMINAL TO THE OTHER WITHOUT LOSS OF LIGHT PERCEPTIBLE TO THE EYE.
2. SWITCH TO WITHSTAND 6 PSI EXTERNAL VACUUM FOR 30 MINUTES WITHOUT LEAKING, AS EVIDENCED BY ESCAPING BUBBLES.
3. WEIGHT: APPROX. .16 Kg, (.37 LBS)
4. ALL DIMENSIONS ARE FOR REFERENCE ONLY.

WATERPROOF

DO NOT SCALE

METRIC

LET	WAS	DATE	BY	LET	WAS	DATE	BY
				G	ECN 25135	5/26/91	RL
				F	ECN 24726	2-5-91	AF
				E	REDRAWN	4-12-85	VAK

MATERIAL	DRAWN	CHECKED	APPRV'D	SCALE		DATE DRAWN
	RMT	T.W.		1:1		4-5-77
FINISH						DATE BLUEPRINT
TOLERANCES DECIM. ± METRIC ±						

Cole Hersee Co.
20 OLD COLONY AVENUE, SOUTH BOSTON, MA., U.S.A. 02127

SWITCH, DIMMER

7784

Confidential Property of Cole Hersee