Littelfuse
Expertise Applied | Answers Delivered

Schottky Barrier Rectifier
DSTF30120C, 2x15A, 120V, ITO-220AB, Common Cathode

DSTF30120C

RoHS Pb

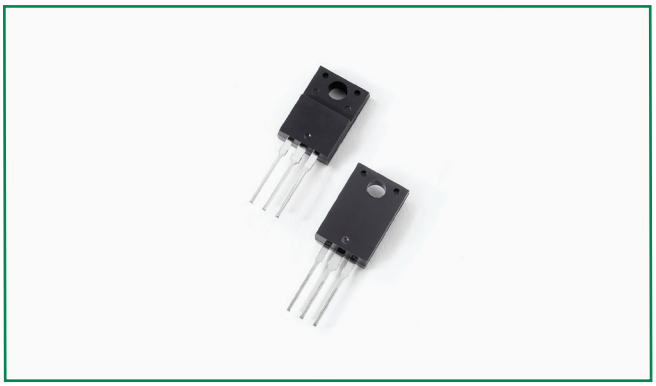

Pin out

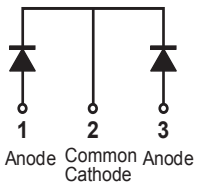

Description

Littelfuse DST series Ultra Low V_F Schottky Barrier Rectifier is designed to meet the general requirements of commercial and industry applications by providing high temperature, low leakage and lower V_F products.

It is suitable for high frequency switching mode power supply, free-wheeling diodes and polarity protection diodes.

Features

- Ultra low forward voltage drop
- High frequency operation
- High junction temperature capability
- Guard ring for enhanced ruggedness and long term reliability
- Common cathode configuration in ITO-220AB package

Applications

- Switching mode power supply
- DC/DC converters
- Free-Wheeling diodes
- Polarity Protection Diodes

Maximum Ratings

Parameters	Symbol	Test Conditions	Max	Unit
Peak Inverse Voltage	V_{RWM}	-	120	V
Average Forward Current	$I_{F(AV)}$	50% duty cycle @T_C =80°C rectangular wave form	15 (per leg)	A
			30 (total device)	
Peak One Cycle Non-Repetitive Surge Current (per leg)	I_{FSM}	8.3 ms, half Sine pulse	300	A

Electrical Characteristics

Parameters	Symbol	Test Conditions	Max	Unit
Forward Voltage Drop (per leg) *	V_{F1}	@15A, Pulse, T_J = 25 °C	0.97	V
	V_{F2}	@15A, Pulse, T_J = 125 °C	0.76	
Reverse Current (per leg) *	I_{R1}	@V_R = rated V_R T_J = 25 °C	0.8	mA
	I_{R2}	@V_R = rated V_R T_J = 125 °C	50	
RSM Isolation Voltage (t = 1.0 second, R. H. < =30%, T_A = 25 °C)	V_{ISO}	Clip mounting, the epoxy body away from the heatsink edge by more than 0.110" along the lead direction.	4500	V
		Clip mounting, the epoxy body is inside the heatsink.	3500	
		Screw mounting, the epoxy body is inside the heatsink.	1500	

* Pulse Width < 300µs, Duty Cycle <2%

©2016 Littelfuse, Inc
Specifications are subject to change without notice.
Revised:02/03/16

Thermal-Mechanical Specifications

Parameters	Symbol	Test Conditions	Max	Unit
Junction Temperature	T_J		-55 to +150	°C
Storage Temperature	T_{stg}		-55 to +150	°C
Thermal Resistance Junction to Case (per leg)	R_{thJC}	DC operation	4.5	°C/W
Approximate Weight	wt		2	g
Case Style	ITO-220AB			

Figure 1: Typical Forward Characteristics

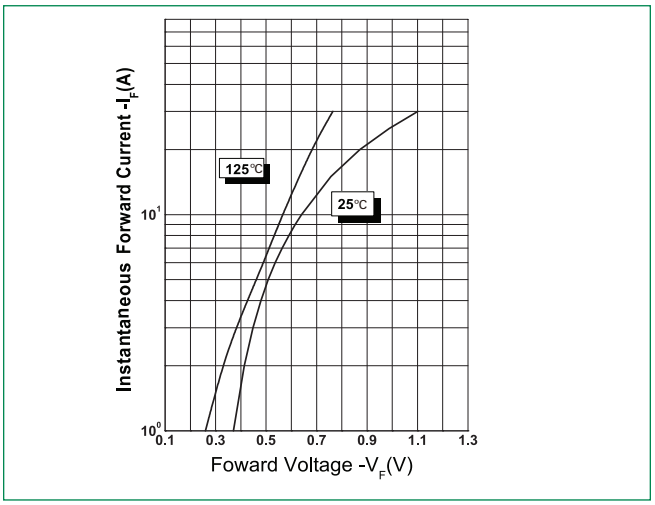

Figure 2: Typical Reverse Characteristics

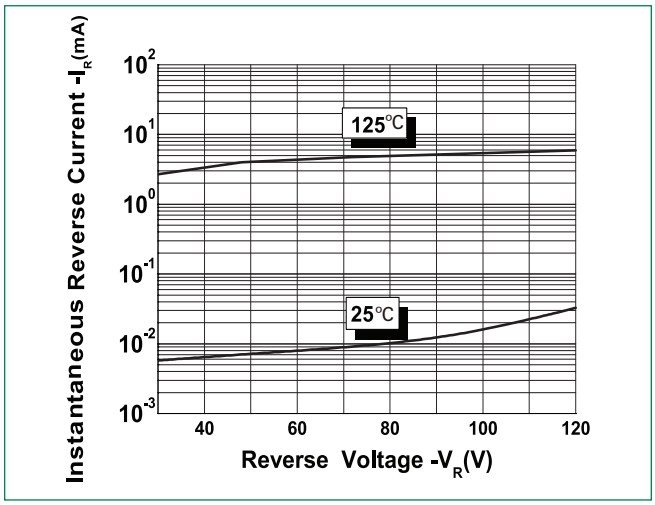

Figure 3: Typical Junction Capacitance

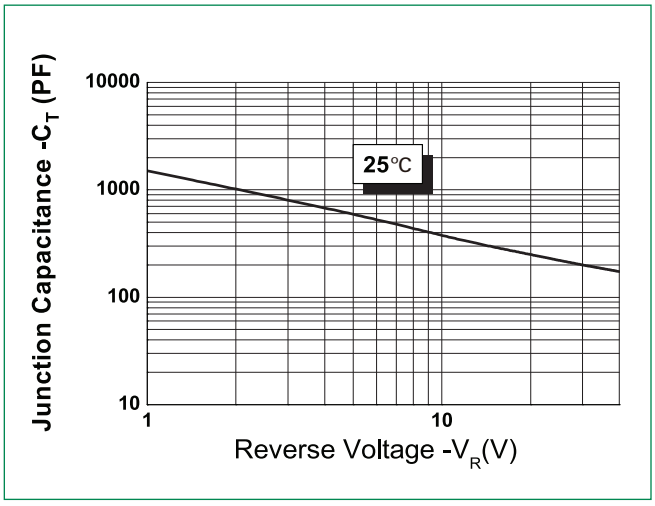

©2016 Littelfuse, Inc
Specifications are subject to change without notice.
Revised:02/03/16

Schottky Barrier Rectifier
DSTF30120C, 2x15A, 120V, ITO-220AB, Common Cathode

Dimensions- ITO-220AB

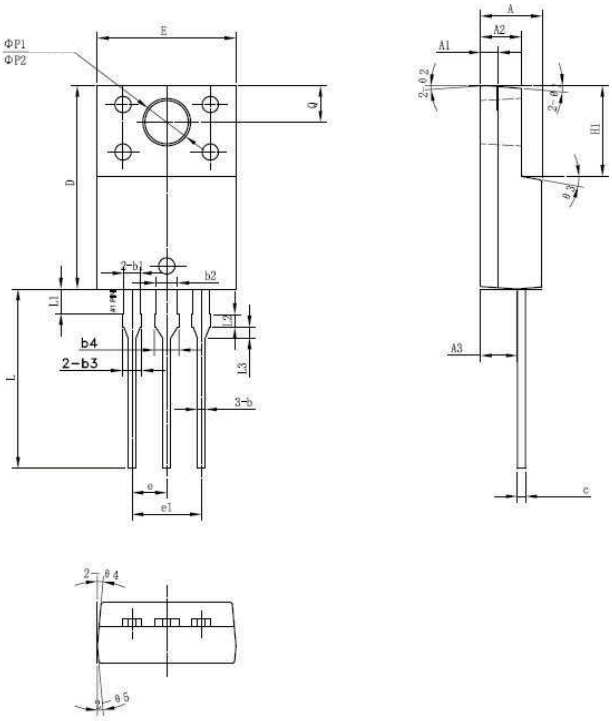

Symbol	Millimeters		
	Min	Typ	Max
A	4.30	4.50	4.70
A1	1.10	1.30	1.50
A2	2.80	3.00	3.20
A3	2.50	2.70	2.90
b	0.50	0.60	0.75
b1	1.10	1.20	1.35
b2	1.50	1.60	1.75
b3	1.20	1.30	1.45
b4	1.60	1.70	1.85
c	0.55	0.60	0.75
D	14.80	15.00	15.20
E	9.96	10.16	10.36
e		2.55	
e1		5.10	
H1	6.50	6.70	6.90
L	12.70	13.20	13.70
L1	1.60	1.80	2.00
L2	0.80	1.00	1.20
L3	0.60	0.80	1.00
øP1	3.30	3.50	3.70
øP2	2.99	3.19	3.39
Q	2.50	2.70	2.90
θ1		5°	
θ2		4°	
θ3		10°	
θ4		5°	
θ5		5°	

Packing Options

Part Number	Marking	Packing Mode	M.O.Q
DSTF30120C	DSTF30120C	50pcs / Tube	1000

Tube Specification

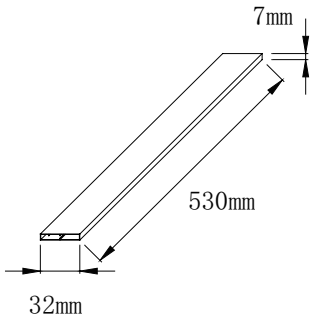

Part Numbering and Marking System

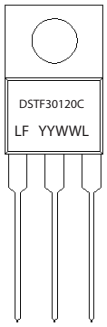

DST = Device Type
F = Package type
30 = Forward Current (30A)
120 = Reverse Voltage (120V)
C = Configuration
LF = Littelfuse
YY = Year
WW = Week
L = Lot Number

©2016 Littelfuse, Inc
Specifications are subject to change without notice.
Revised:02/03/16