THIS DRAWING AND THE INFORMATION CONTAINED WITHIN IT ARE CONFIDENTIAL AND MAY NOT BE COPIED OR DISCLOSED WITHOUT THE WRITTEN PERMISSION OF LITTELFUSE.

REVISIONS

REV.	DESCRIPTION	DATE	DESIGNED	APPROVED
A	First issue of outline drawing	22-Jan-21	L.Dal Molin	M.Tinto
B	Note added	26-Mar-21	L.Dal Molin	M.Tinto

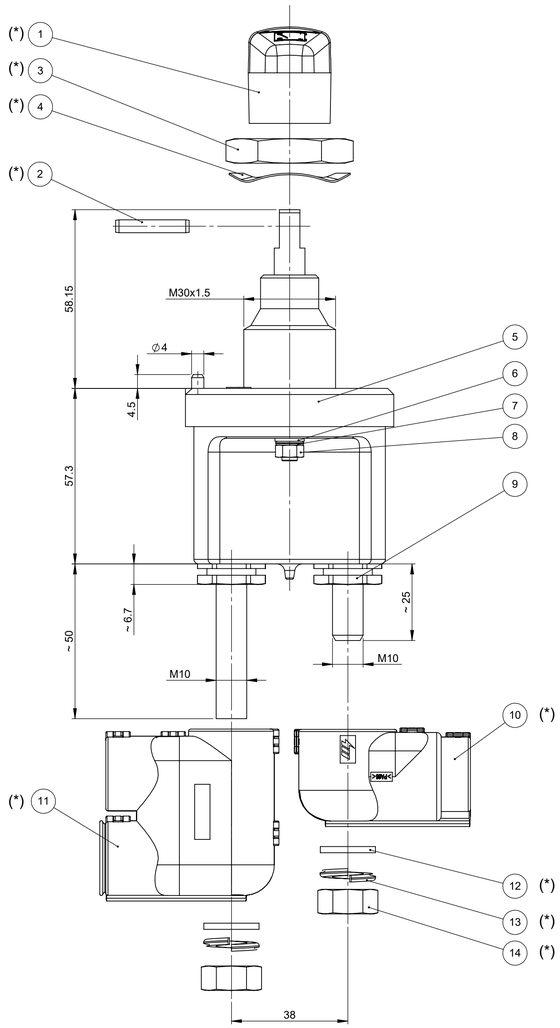

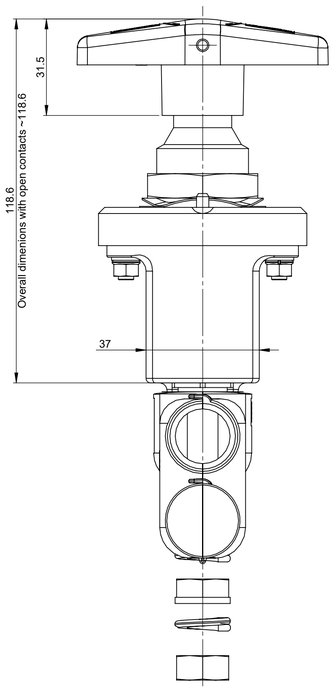

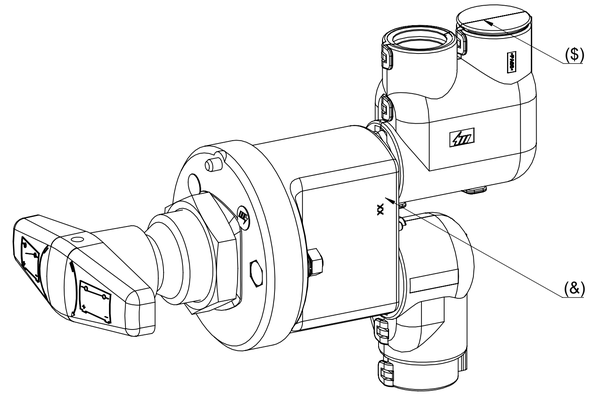

POS.	p/N	DESCRIPTION	MAERIAL	Q.TY	U/M
14		Nut M10	Brass	2	EA
13		Spring washer B10	Bronze	2	EA
12		Plane washer 10.3x18x2	Brass	2	EA
11		Double cont. protection -Wire 50mmq	Thermoplastic material	1	EA
10		Cont. protection -Wire 50mmq	Thermoplastic material	1	EA
9		Nut M10 for housitng protection	Brass	2	EA
8		Nut M5	Steel	2	EA
7		Spring washer To 5	Steel	2	EA
6		Plane washer Tc 5.3x9.5	Steel	2	EA
5		Complete IGC		1	EA
4		Elastic ring	Steel	1	EA
3		Nut M30x1.5	Brass	1	EA
2		Spiral spring pin	Steel	1	EA
1		Handle	Aluminium	1	EA

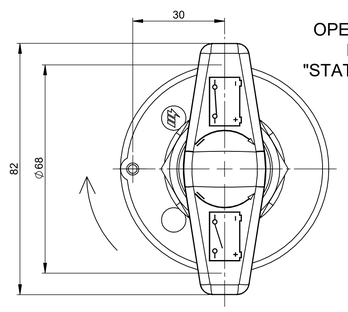

OPEN CONTACTS
POSITION
"STATE OF SUPPLY"

FIXING HOLES

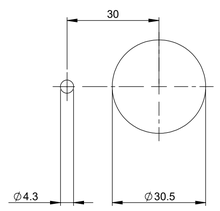

ELECTRICAL DIAGRAM

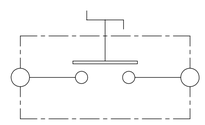

PRESCRIPTIONS
- (&) Supplier name or p/N must be marked on the switch, the device code and date of manufacture according to IVECO Std.
- The contact must be closed by turning the handle clockwise 90°
- ($) Breakthrough type protection panel
- (*) Handle, spiral spring pin, nut M30x1.5, elastic ring, protections, nuts and washers supplied in the kit

CHARACTERISTICS
- Max operating voltage: 24DC
- Max continuos current: 250A & 350A
- Intermittent current: 2500A at 3 sec.
- Handle operating torque: 1.5(±0.5) Nm
- M10 nut closing pair: 19(±3) Nm
- M5 nut closing pair: 1.5(±0.5) Nm
- Locking nut M30x1.5: 35(±5) Nm
- Maximum thickness lockable with nut M30: 12mm
- Ⓑ - Handle operating torque: 2±0.5 Nm

SAP drawing number: 10000098965

Material and treatments:

DIMENSIONS AND TOLERANCES IN MILLIMETERS, DEFINED ACCORDING TO ISO 1101-2017.

linear dimensions

0,5 3	>3 6	>6 30	>30 120	>120 400	>400 1000	>1000 2000
±0,2	±0,3	±0,5	±0,8	±1,2	±2	±3

angle (for range of lengths)

up to 10	>10 50	>50 120	>120 400
±1°30'	±1°	±0°30'	±0°15'

●	FIT/ FUNCTION CRITICAL CHARACTERISTICS SYMBOL
<S>	SAFETY/ COMPLIANCE CRITICAL CHARACTERISTICS SYMBOL
CPK	DENOTES CPK DIMENSIONS MINIMUM CPK VALUE
ST	DENOTES A CHARACTERISTIC THAT PROVIDES AN INDICATION OF PROCESS PERFORMANCE PROCEDURE FOR MEASUREMENTAND TRACKINGTO BE DEFINED IN LITTELFUSE INSPECTION INSTRUCTIONS
CP	DENOTES CP DIMENSIONS, -MINIMUM CP VALUE MUST BE WITHIN THE DIMENSIONAL LIMITATIONS SHOWN ON DRAWING AND INITIALLY LOCATED TO ALLOW FOR MAXIMUM TOOL LIFE

	NAME	DATE
DRAWN	L. Dal Molin	22-Jan-21
CHECKED	-	-
	-	-
	-	-

Littelfuse
Expertise Applied | Answers Delivered

FORM NO. CVP-PE40-0013 REV A

FIRST ANGLE PROJECTION

TITLE
250A MANUAL BATTERY MASTER SWITCH
WITH FIXED HANDLE AND PROTECTIONS

SIZE A1 | DWG. NO. OL-080991/0 | OUTLINE | REV. B

DO NOT SCALE DRAWING | SCALE 1:1 | SHEET 1 OF 1