THIS DRAWING AND THE INFORMATION CONTAINED WITHIN IT ARE CONFIDENTIAL AND MAY NOT BE COPIED OR DISCLOSED WITHOUT THE WRITTEN PERMISSION OF LITTELFUSE.

REVISIONS

ZONE	REV.	DESCRIPTION	DATE	APPROVED
	A	ECN# 00024 TY	1/14/2020	
	B	ECO #523271 - ADD SPECIFICATION NOTE RELATED TO ADD STICK LABEL & WHITE BOX PACKAGING	2/10/2021	S CASTILLO

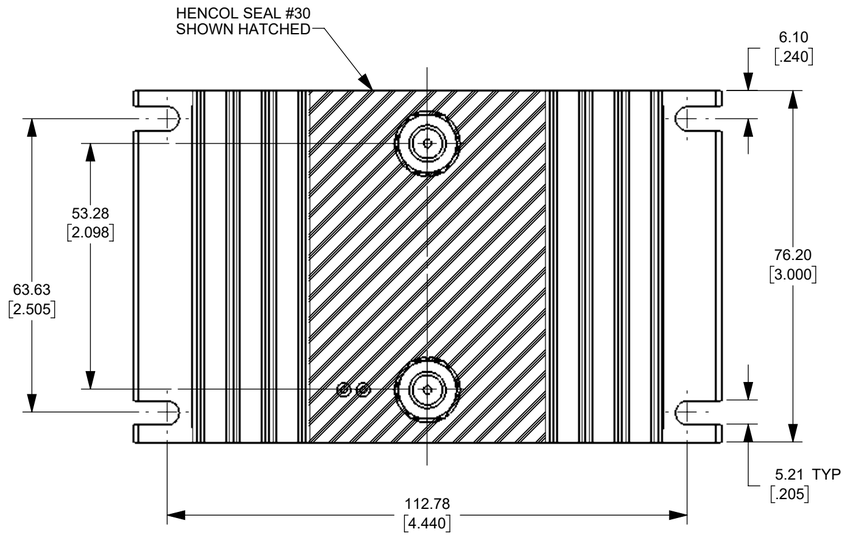

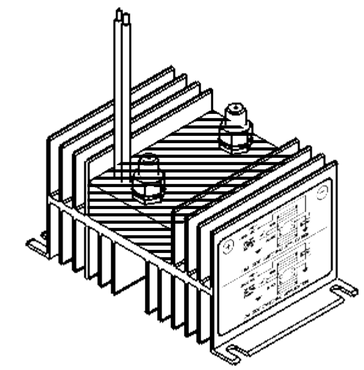

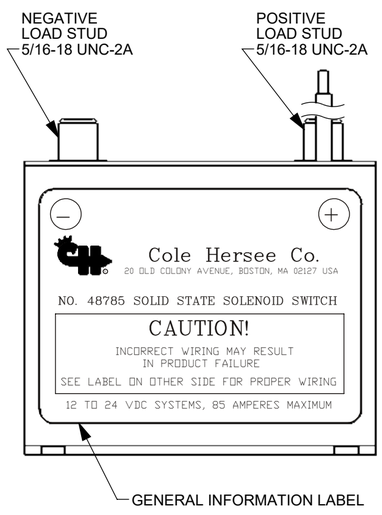

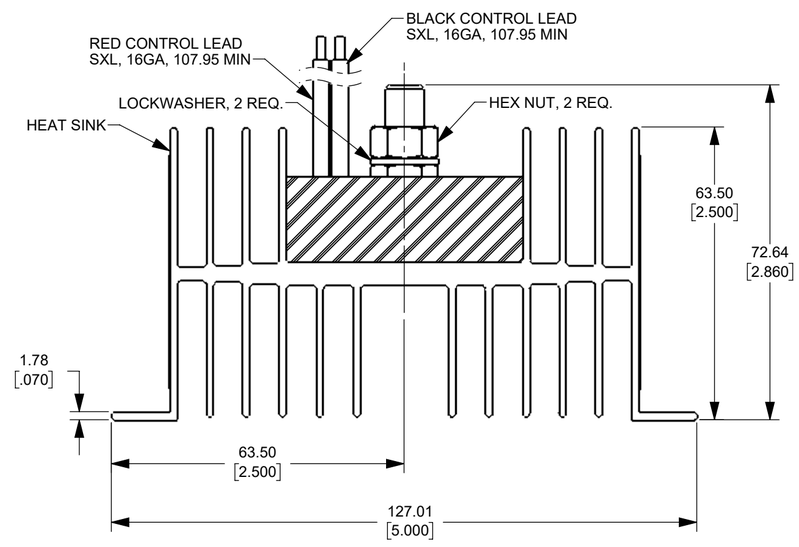

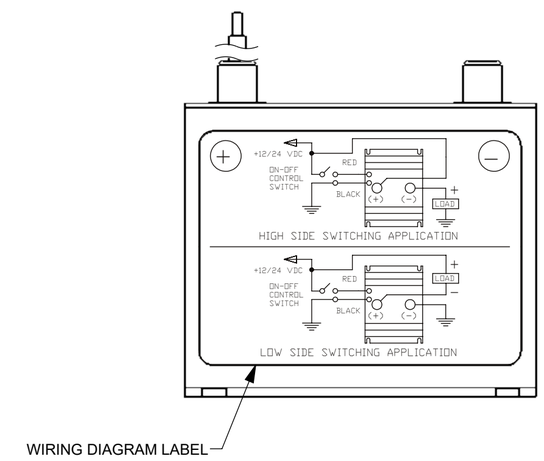

NOTES:
1. ALL STEEL PARTS ARE PLATED.
2. ALL DIMENSIONS ARE REFERENCE ONLY.
3. PACK SOLENOID IN WHITE BOX CA-531 AND STICK LABEL 663 (PROP. 65) IN BOX.

MM
[INCH]

DIMENSIONS ARE SHOWN IN MILLIMETERS. DIMENSIONS AND TOLERANCES ARE DEFINED ACCORDING TO ANSI/ASME Y14.5-1994.

●	FIT/ FUNCTION CRITICAL CHARACTERISTICS SYMBOL
<S>	SAFETY/ COMPLIANCE CRITICAL CHARACTERISTICS SYMBOL
CPK	DENOTES CPK DIMENSIONS MINIMUM CPK VALUE
(ST)	DENOTES A CHARACTERISTIC THAT PROVIDES AN INDICATION OF PROCESS PERFORMANCE.PROCEDURE FOR MEASUREMENTAND TRACKINGTO BE DEFINED IN LITTELFUSE INSPECTION INSTRUCTIONS
CP	DENOTES CP DIMENSIONS, -MINIMUM CP VALUE MUST BE WITHIN THE DIMENSIONAL LIMITATIONS SHOWN ON DRAWING AND INITIALLY LOCATED TO ALLOW FOR MAXIMUM TOOL LIFE

TOLERANCES UNLESS OTHERWISE SPECIFIED (REF.ISO2768-M) FOR METAL, REF SPI PLASTICS

DIMENSION MM	UP TO 0.5 - 3	OVER 3 - 6 UP TO	OVER 6 - 30 UP TO	OVER 30 - 120 UP TO	OVER 120 - 400 UP TO	ANGLE
TOLERANCES	±0.1	±0.1	±0.2	±0.3	±0.5	±0.5°

	NAME	DATE
DRAWN	TY	09/14/99
CHECKED	-	-
	-	-
	-	-

FORM NO: CVP-PE40-0005 REV A

THIRD ANGLE PROJECTION

DO NOT SCALE DRAWING

Littelfuse®
Expertise Applied | Answers Delivered

TITLE
SOLID STATE SOLENOID

SIZE C | DWG. NO. 48785 | REV. B

SCALE 1:1 | SHEET 1 OF 1