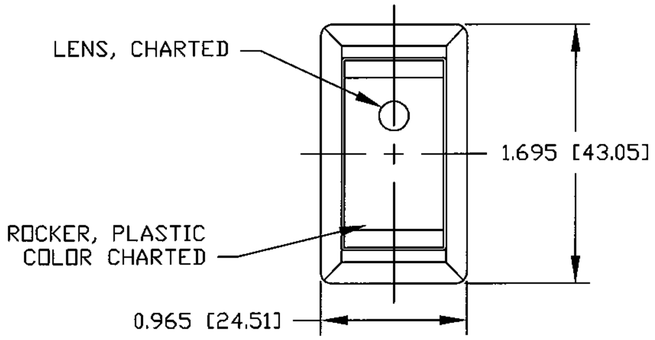

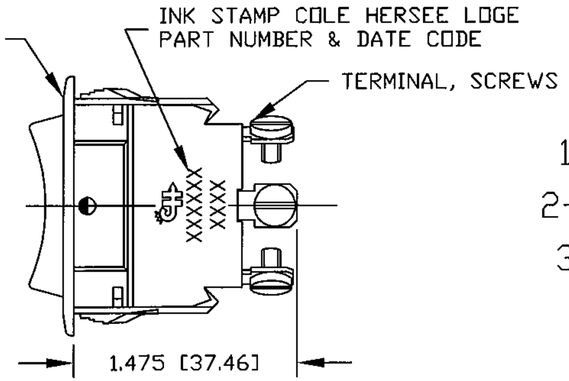

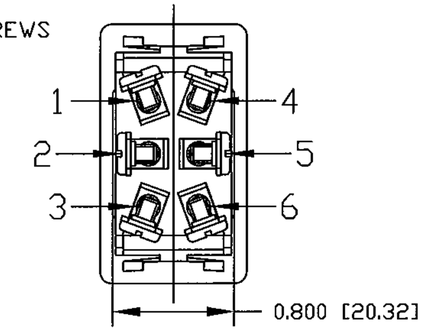

NOTES:
1. ALL DIMENSIONS ARE REFERENCE ONLY
2. CONTACT RATING:
   25 AMPS @ 12V DC
   15 AMPS @ 24V DC
3. SILVER CONTACTS

ROCKER POSITIONS

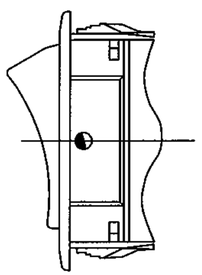

POSITION A

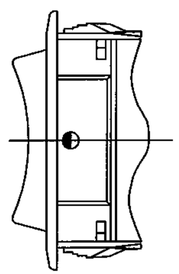

POSITION B

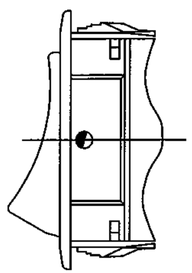

POSITION C

IMPRINTING LOCATION

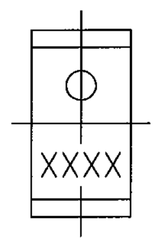

LOCATION D

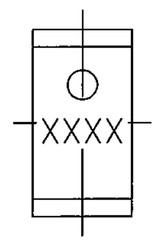

LOCATION E

LOCATION F

LENS LOCATION

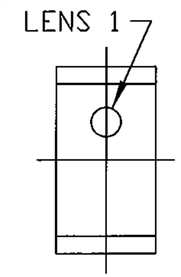

LOCATION G

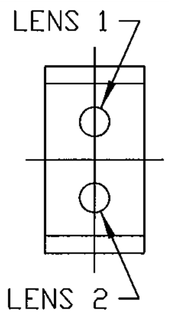

LOCATION H

LOCATION J

LOCATION K

MOUNTING HOLE DETAIL

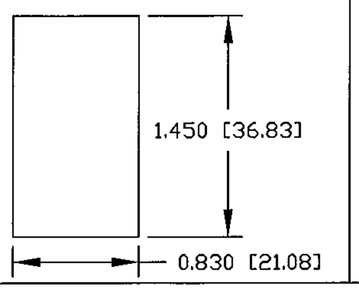

ROCKER COLORS

BLACK

IMPRINT COLORS

WHITE

LAMP VOLTAGE

12V DC
24V DC

LENS COLORS

AMBER
BLUE
GREEN
RED

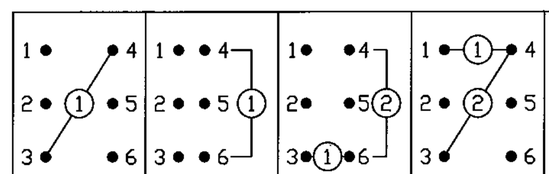

1	2	3	4	5	6	7	8	9	10	11

LAMP SCHEMATIC

Revision Control Record

Rev.	Description of Change	ECN No.	Date
B	CHANGE NOTES	09378	07/30/09

Rev.	Description of Change	ECN No.	Date

Tolerances Unless otherwise specifically noted, the following are default tolerances;

2-places	3-places	Angular
+/- 0.02"	+/- 0.005"	+/- 1°

Metric: Shown in [ ] refers to equivalent English Dim Tol

"REF." or an Asterisk (*) = Non-Toleranced Reference Dimension, shown for clarification purposes only.

NOTE: *All tolerances are Non-Cumulative.*

PROPRIETARY INFORMATION
This Engineering Drawing, and the information contained herein, is proprietary to Cole Hersee Company and may not be disclosed, re-produced, or in any other way transferred or communicated to any other party without the express written consent of an authorized representative of Cole Hersee Company.

Special Characteristics:

- (CC) Critical Characteristic, relating to Safety and/or Regulatory Compliance
- [X] Significant Characteristic relating to Process Control
- (KC) Control Dimension relating to Form - Fit - Function as defined by Cole Hersee Company and/or the Customer

Cole Hersee Co.
20 Old Colony Ave., South Boston, MA, 02127
Phn: 617-268-2100 Web: www.colehersee.com

Description: ROCKER SWITCH

Drawing / Part No.: 56327 CHART

Current Rev. B

FORM CHT-6 (2/07) | Used On or Ref.: | Scale: 1:1 | Drawn BY: MJT | Date Drawn: 11/09/93 | Pg. 1 of 2