THIS DRAWING AND THE INFORMATION CONTAINED WITHIN IT ARE CONFIDENTIAL AND MAY NOT BE COPIED OR DISCLOSED WITHOUT THE WRITTEN PERMISSION OF LITTELFUSE.

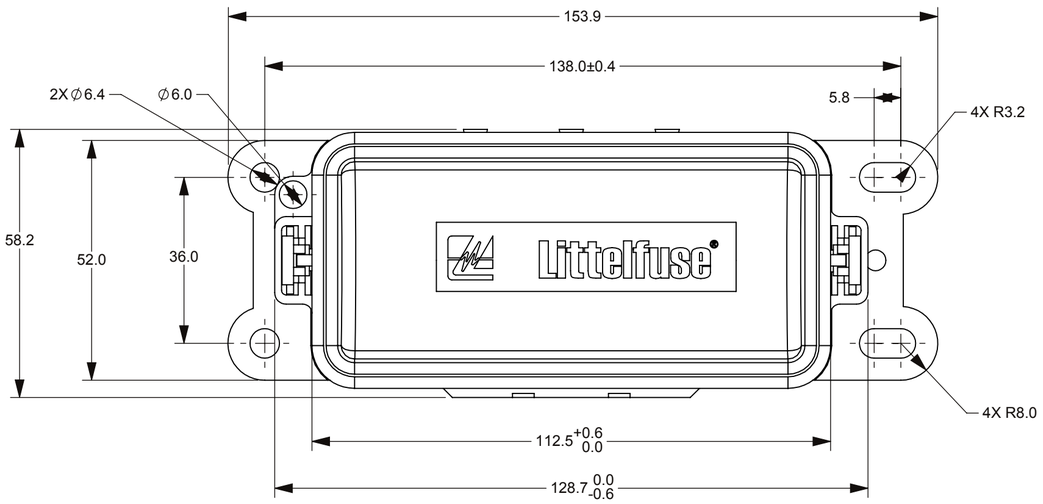

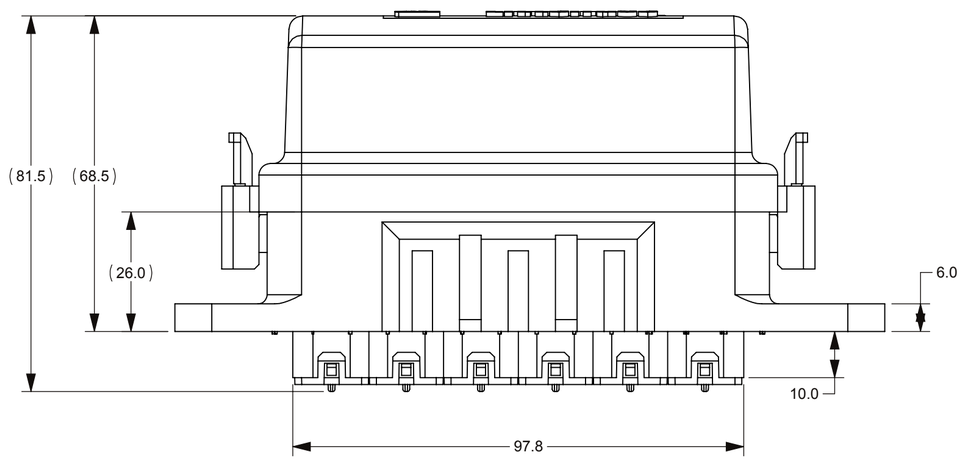

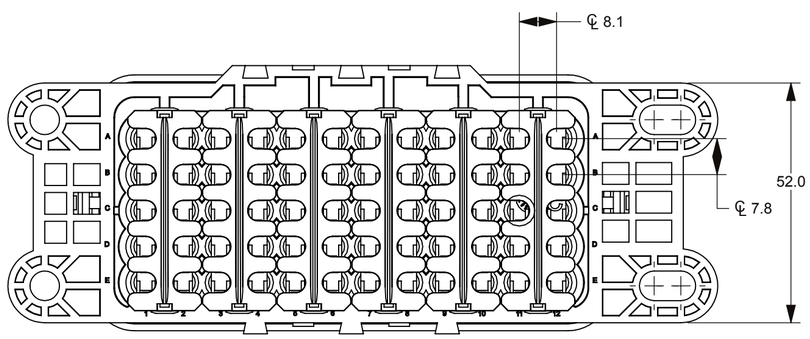

FEMALE TERMINAL FOR MINI FUSE				
CABLE SIZE mm^2	FEMALE TERMINAL (DELPHI 280 SEAL)	CABLE DIAMETER	CABLE SEAL (DELPHI 280 METRI-PACK REEL/LOOSE)	COLOR
0.50 - 0.35	12084201	1.70 - 1.29	12034365 / 15324983	DARK RED
1.0 - 0.50	12077411	2.15 - 1.60	12089444 / 15324985	PURPLE
3.0 - 2.0	12129493	2.42 - 2.03	12041352 / 15324984	TAN
2.0 -1.0	15363933	2.85 - 2.03	12015284 / 15324982	GREEN
3.0 - 2.0	12129493	3.49 - 2.81	12015359 / 15324980	GRAY
5.0	12077413	4.30 - 3.45	12015360 / 15324981	BLUE
		CAVITY PLUG	12010300	GREEN

REVISIONS

ZONE	REV.	DESCRIPTION	DATE	APPROVED
	A	5154346GCA - NEW RELEASE FYUE	15/JAN/2016	
	B	ECO 520021 - UPDATE DIMENSIONS TO MATCH MATAMOROS LITTELFUSE MOLDING PROCESS: 153.9MM (WAS 154.5), 58.2MM (WAS 58.4), 68.5MM (WAS 68.4), 81.5MM (WAS 81.4). ADD DIA 6.0MM. ADD COVER NORYL MATERIAL. ADD JIS D0203 S2 SPRAY SPEC & BALL IMPACT DROP TEST UL583. ADD FEMALE TERMINAL PART NO. REMOVE OPERATION & STORAGE TEMPERATURE (WAS -40 TO 125 DEG C). REDRAWN CAD IN SOLIDWORKS USING NEW CVP DRAWING FORMAT & TOLERANCE . AHOANG	26/OCT/2018	A JOZWIAK

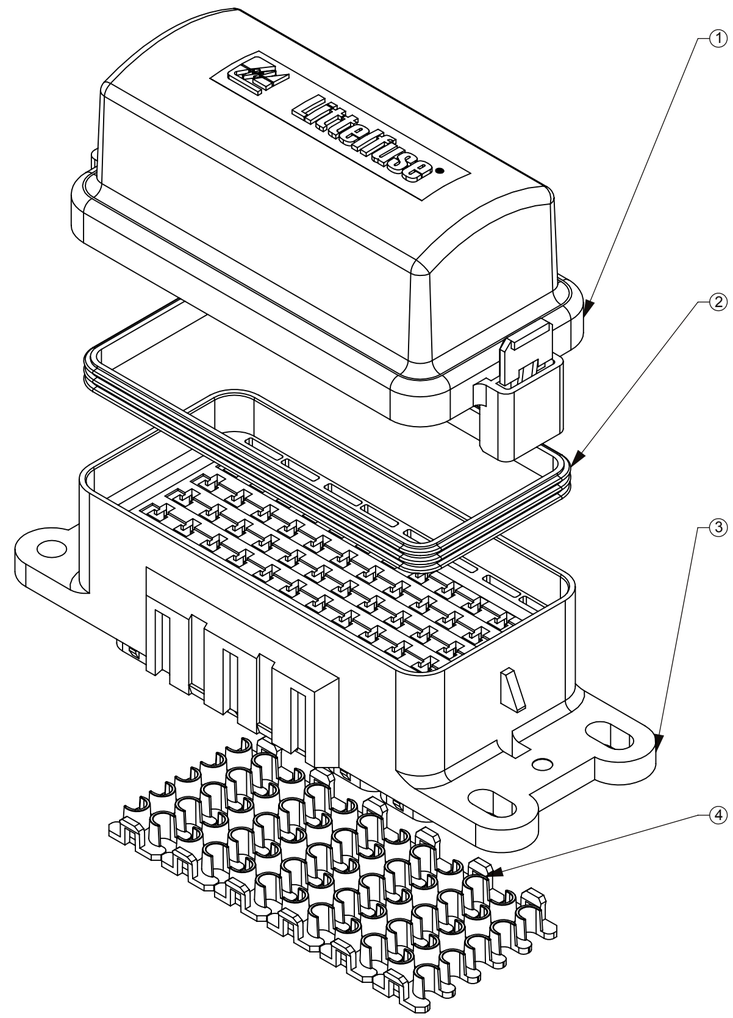

NO.	COMPONENT NO.	COMPONENT NAME	QTY	U/M
1	873-029T	COVER	1	EA
2	901-315	SEAL	1	EA
3	868-163	BASE	1	EA
4	883-083	TPA	6	EA

DIMENSIONS ARE SHOWN IN MILLIMETERS. DIMENSIONS AND TOLERANCES ARE DEFINED ACCORDING TO ANSI/ASME Y14.5-1994.

●	FIT FUNCTION CRITICAL CHARACTERISTICS SYMBOL
<S>	SAFETY/ COMPLIANCE CRITICAL CHARACTERISTICS SYMBOL
CPK	DENOTES CPK DIMENSIONS MINIMUM CPK VALUE
⟨ST⟩	DENOTES A CHARACTERISTIC THAT PROVIDES AN INDICATION OF PROCESS PERFORMANCE.PROCEDURE FOR MEASUREMENTAND TRACKINGTO BE DEFINED IN LITTELFUSE INSPECTION INSTRUCTIONS
CP	DENOTES CP DIMENSIONS, -MINIMUM CP VALUE MUST BE WITHIN THE DIMENSIONAL LIMITATIONS SHOWN ON DRAWING AND INITIALLY LOCATED TO ALLOW FOR MAXIMUM TOOL LIFE

DIMENSION; MM TOLERANCES UNLESS OTHERWISE SPECIFIED
ONE PLACE DECIMAL ± 0.5 THREE PLACES DECIMAL ± 0.100
TWO PLACES DECIMAL ± 0.20 ANGULAR ± 2°

	NAME	DATE
DRAWN	FYUE	15 JAN 2016
CHECKED	-	-
	-	-
	-	-

FORM NO: CVP-PE40-0006 REV A

THIRD ANGLE PROJECTION

DO NOT SCALE DRAWING

Littelfuse®
Expertise Applied | Answers Delivered

TITLE
60 WAY FUSE HOLDER (TOYOTA)

SIZE C | DWG. NO. OL-PDM21005LXM | OUTLINE | REV. B

SCALE 1:1 | SHEET 1 OF 1

NOTES:
1. MATERIAL:
   BASE: PA66, 30% GF, BLACK
   COVER: PPE+PS NORYL, BLACK
   TPA: PA, BLUE
   SEAL: SILICONE RUBBER, GREEN
2. TORQUE RATING (ON FLAT SURFACE): 4-6 Nm USING M6 BOLT & LOCK WASHER.
3. FUSE RATING: 30A PER CIRCUIT.
4. ASSEMBLY PASS: JIS D0203 S2 SPRAY TEST & TOP OF COVER UL583 STEEL BALL IMPACT (.5KG AT 1.3M HEIGHT)
6. TERMINAL RETENTION PER USCAR 2 SECTION 5.4.1.3 USING PROPER DELPHI METRI-PACK TERMINALS(SEALED / TANGLESS)
7. TPA RETENTION PER USCAR 2 SECTION 5.4.5.4
8. MAXIMUM CONTINUOUS CURRENTS: 250A FOR ENTIRE FUSEHOLDER
9. 60 TERMINAL OPENINGS