THIS DRAWING AND THE INFORMATION CONTAINED WITHIN IT ARE CONFIDENTIAL AND MAY NOT BE COPIED OR DISCLOSED WITHOUT THE WRITTEN PERMISSION OF LITTELFUSE.

REVISIONS				
ZONE	REV.	DESCRIPTION	DATE	APPROVED
	A	INITIAL DWG RELEASE	4/10/2013	M. MILLSON
	B	PER EC#509902: UPDATED SCHEMATIC	10/21/2013	V.BELOUS
	C	PER EC#510572:CORRECTED BOM ERROR ON THE SECOND PAGE	6/4/2014	J. LIU
	D	PER GCF #518972 :ADD NEW P/N FOR RED/YELLOW KNOB AND UPDATE NOTES	02/26/2018	J. LI

NOTES: (UNLESS OTHERWISE SPECIFIED)
1.ALL DIMENSIONS ARE REFERENCE ONLY
2.MATERIAL AND FINISHED:
HOUSING: THERMOPLASTIC
KNOB: THERMOPLASTIC
STUD: COPPER TIN PLATED
NUT: STAINLESS STEEL
INTERNAL BUSBAR: COPPER
3.INGRESS PROTECTION RATING IS IP67 & IP69K
4.MAXIMUM CONTINUOUS CURRENT:
500A PER CIRCUIT, WITH 2 x 4/0 INPUT AND 2 x 4/0 OUTPUT CABLES
350A PER CIRCUIT, WITH 1 x 4/0 INPUT AND 1 x 4/0 OUTPUT CABLES
5.MAXIMUM OPERATING VOLTAGE 48V
6.TERMINAL STUD SIZE M12X25mm, RECOMMENDED TERMINAL TORQUE 20 Nm
7.RECOMMENDED MOUNTING TORQUE 15Nm
8.OPERATING TEMPERATURE RANGE: -50 °C TO +85 °C, DC-RATED TO 105°C

SCHEMATIC

B

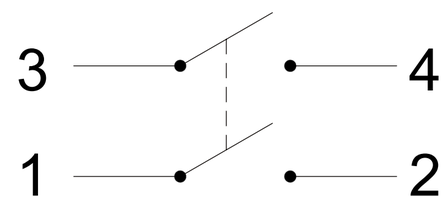

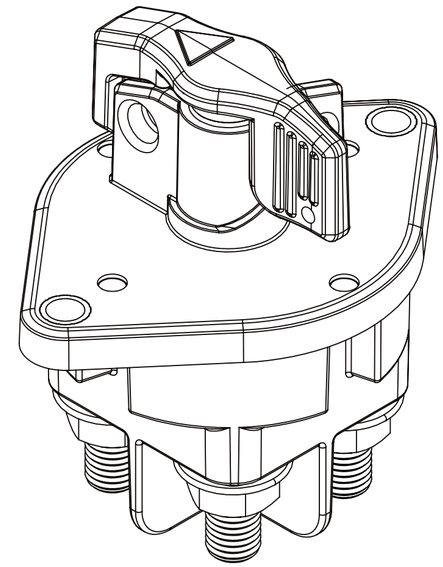

CONFIGURATION CHART		
PRODUCT NUMBER	KNOB COLOR	REMARK
880175	BLACK	
880175-0001	RED	
880175-0002	YELLOW	

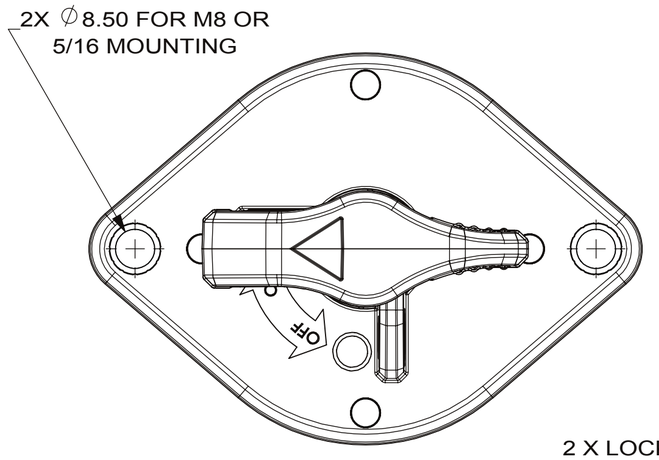

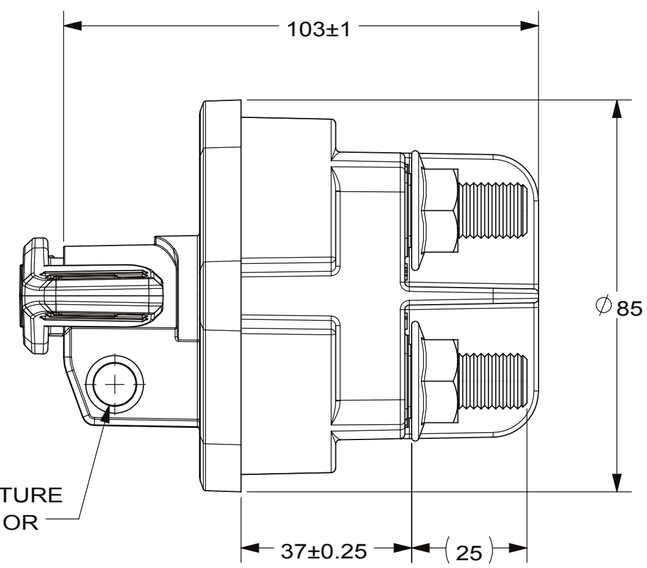

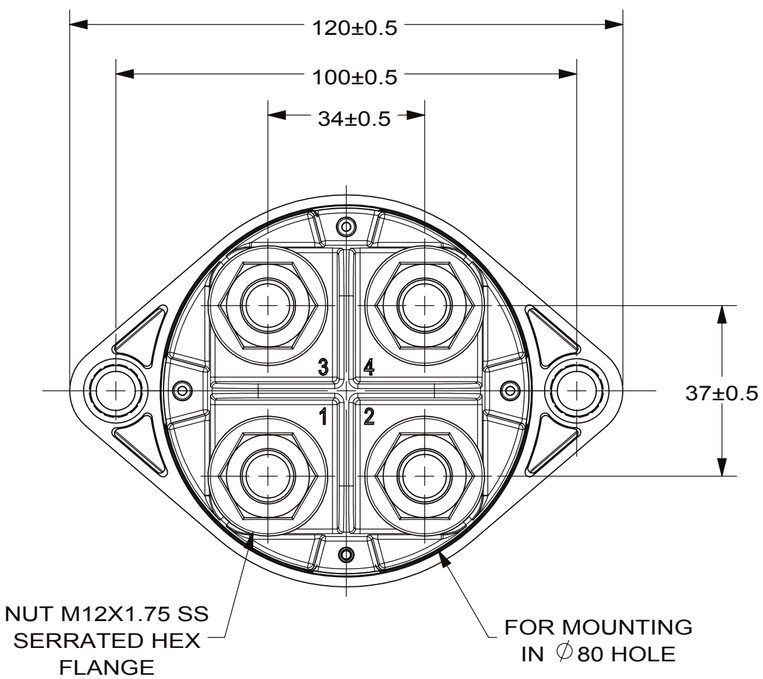

DIMENSIONS ARE SHOWN IN MILLIMETERS. DIMENSIONS AND TOLERANCES ARE DEFINED ACCORDING TO ANSI/ASME Y14.5-1994.

●	FIT FUNCTION CRITICAL CHARACTERISTICS SYMBOL
<S>	SAFETY/ COMPLIANCE CRITICAL CHARACTERISTICS SYMBOL
CPK	DENOTES CPK DIMENSIONS MINIMUM CPK VALUE
ST	DENOTES A CHARACTERISTIC THAT PROVIDES AN INDICATION OF PROCESS PERFORMANCE.PROCEDURE FOR MEASUREMENTAND TRACKINGTO BE DEFINED IN LITTELFUSE INSPECTION INSTRUCTIONS
CP	DENOTES CP DIMENSIONS, -MINIMUM CP VALUE MUST BE WITHIN THE DIMENSIONAL LIMITATIONS SHOWN ON DRAWING AND INITIALLY LOCATED TO ALLOW FOR MAXIMUM TOOL LIFE

DIMENSION; MM TOLERANCES UNLESS OTHERWISE SPECIFIED
ONE PLACE DECIMAL ± 0.5 THREE PLACES DECIMAL ± 0.100
TWO PLACES DECIMAL ± 0.20 ANGULAR ± 2°

	NAME	DATE
DRAWN	V.Belous	2/6/2012
CHECKED	-	-
	-	-
	-	-

FORM NO: CVP-PE40-0006 REV A

THIRD ANGLE PROJECTION

DO NOT SCALE DRAWING

Littelfuse®
Expertise Applied | Answers Delivered

TITLE
Switch Master TR 2 Pole 300A

SIZE	DWG. NO.	REV.
C	OL-880175, CHART	D

SCALE 1:2 SHEET 1 OF 1