FEMALE TERMINAL FOR MINI FUSE				
CABLE SIZE mm²	FEMALE TERMINAL (DELPHI 280 SEALED)	CABLE DIA	CABLE SEAL (DELPHI 280 METRI-PACK REEL/LOOSE)	COLOR
0.50 - 0.35	12084201	1.70 - 1.29	12034365/15324983	DARK RED
1.0 - 0.50	12077411	2.15 - 1.60	12089444/15324985	PURPLE
2.0 - 1.0	15363933	2.85 - 2.03	12015284/15324982	GREEN
3.0 - 2.0	12129493	3.49 - 2.81	12015359/15324980	GRAY
5.0	12077413	4.30 - 3.45	12015360/15324981	BLUE
		CAVITY PLUG	12010300	GREEN

LTR	DATE	REVISION	CHK	APD
A	07/31/14	510769ERA-NEW RELEASE FYUE		
B	12/29/14	511250ECA-UPDATE DIMENSIONS BASE ON ACTUAL PARTS FYUE		
C	03/25/15	511726ECA-ADD FOUR MORE RIBS ON COVER FYUE		

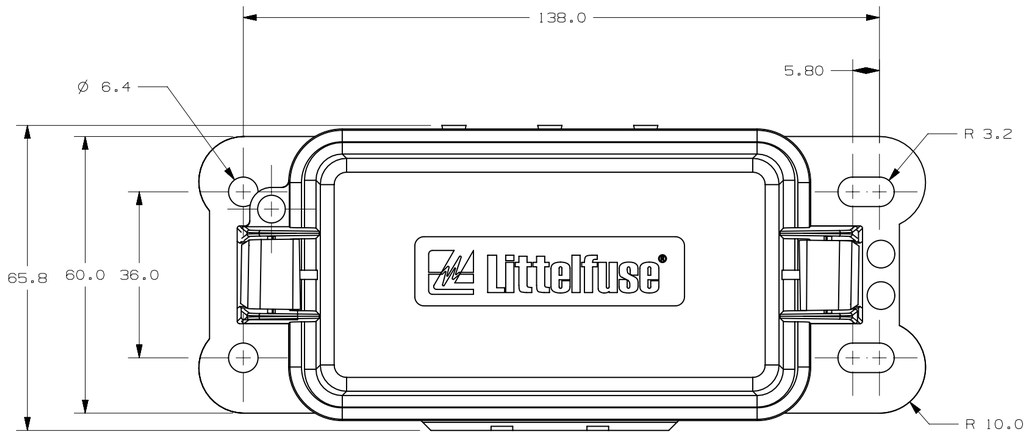

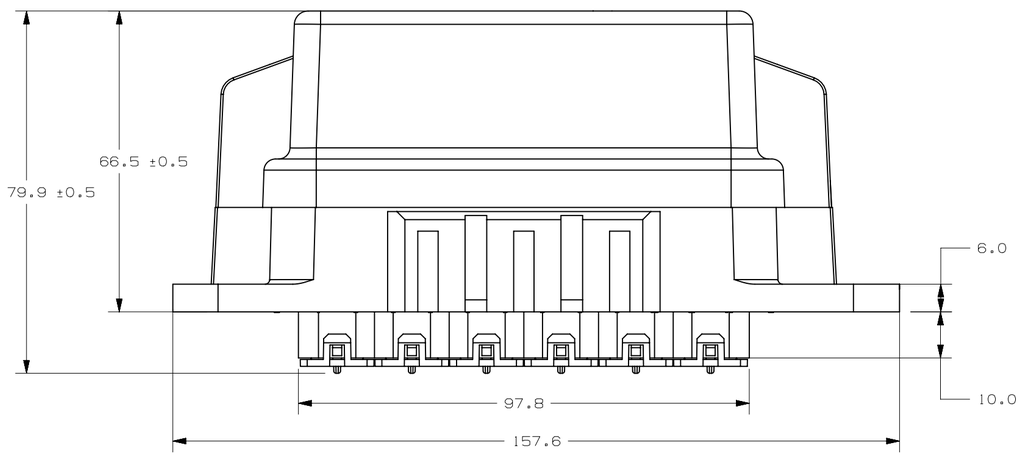

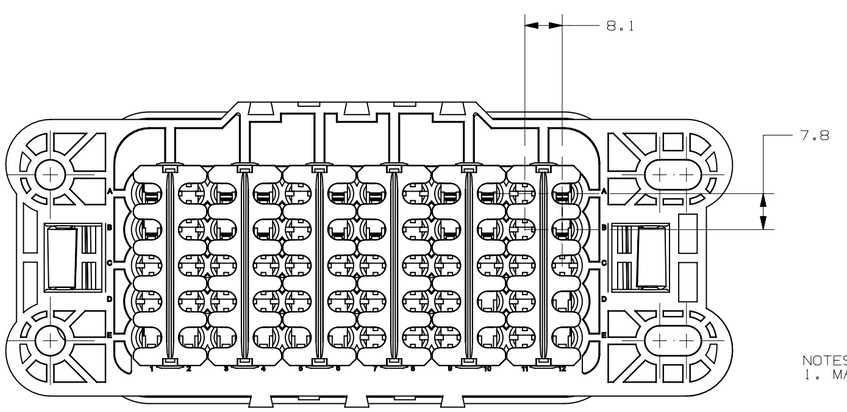

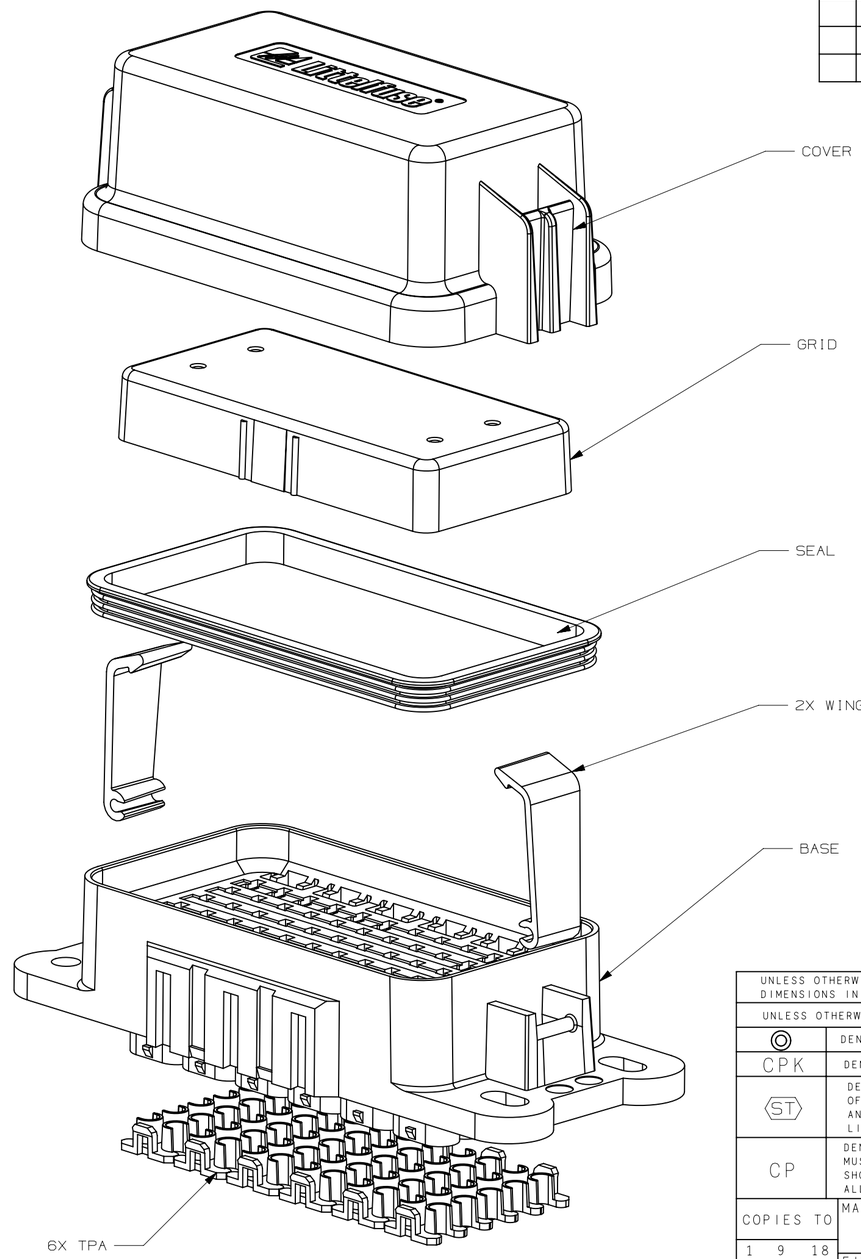

NOTES:
1. MATERIAL:
   BASE/COVER:PA66,30%GF,BLACK
   TPA: PA,BLUE
   SEAL: SILICONE RUBBER,GREEN
2. TORQUE RATING: 4-6 Nm USING M6 BOLT & LOCK WASHER.
3. FUSE RATING: 30A PER CIRCUIT.
4. OPERATING & STORAGE TEMPERATURE: -40°C TO 125°C
5. IP SEALING CLASS PER IEC60529 IP66 & IP67.
6. TERMINAL RETENTION PER USCAR 2 SECTION 5.4.1.3 USING PROPER DELPHI METRI-PACK TERMINALS (SEALED/TANGLESS).
7. TPA RETENTION PER USCAR 2 SECTION 5.4.5.4
8. MAX. CONTINUOS CURRENT: 250A FOR ENTIRE FUSEHOLDER.

METRIC
ASSEMBLY

UNLESS OTHERWISE SPECIFIED, DIMENSIONS ARE IN MILLIMETERS.
DIMENSIONS IN BRACKETS [ ] ARE INCHES

UNLESS OTHERWISE SPECIFIED, DIMENSIONS DO NOT INCLUDE PLATING.

◎	DENOTES CRITICAL CHARACTERISTICS.
CPK	DENOTES CPK DIMENSIONS, -MINIMUM CPK VALUE
ST	DENOTES A CHARACTERISTIC THAT PROVIDES AN INDICATION OF PROCESS PERFORMANCE. PROCEDURE FOR MEASUREMENT AND TRACKING TO BE DEFINED IN LITTELFUSE INSPECTION INSTRUCTIONS
CP	DENOTES CP DIMENSIONS, -MINIMUM CP VALUE MUST BE WITHIN THE DIMENSIONAL LIMITATIONS SHOWN ON DRAWING AND INITIALLY LOCATED TO ALLOW FOR MAXIMUM TOOL LIFE

COPIES TO				
1 9 18	MATL SPEC SEE NOTE			
2 10 19	FINISH NONE			
3 12 20				
4 13 21	DRW FYUE	DATE 07/31/14	SCALE 1:1	
5 14 23				
6 15 33	CHK	DATE	SUPER DR	
7 16 43				
8 17 53	APPD	DATE	FINSH GOOD WT GRAMS/PIECE	

TOLERANCES UNLESS OTHERWISE SPECIFIED (REF. ISO 2768-ᴍH)

DIMENSION	UP TO 0.5 - 3	OVER 3 - UP TO 6	OVER 6 - UP TO 30	OVER 30 - UP TO 120	OVER 120 - UP TO 400
TOLERANCE	±0.1	±0.1	±0.2	±0.3	±0.5

3RD ANGLE PROJECTION

TITLE
60 WAY FUSE HOLDER (NAVISTAR)

Littelfuse®
DES PLAINES, ILLINOIS 60016

REVISION	DRWG. NO.	OUTLINE
C	PDM71002ZXM	

CAD GENERATED DRAWING – NO PENCIL CHANGES ALLOWED