30418

CHART

MM	IN
0 810	0 032
2 790	0 110
3 810	0 150
6 350	0 250
8 990	0 354
9 470	0 373
12 270	0 483
26 920	1 060

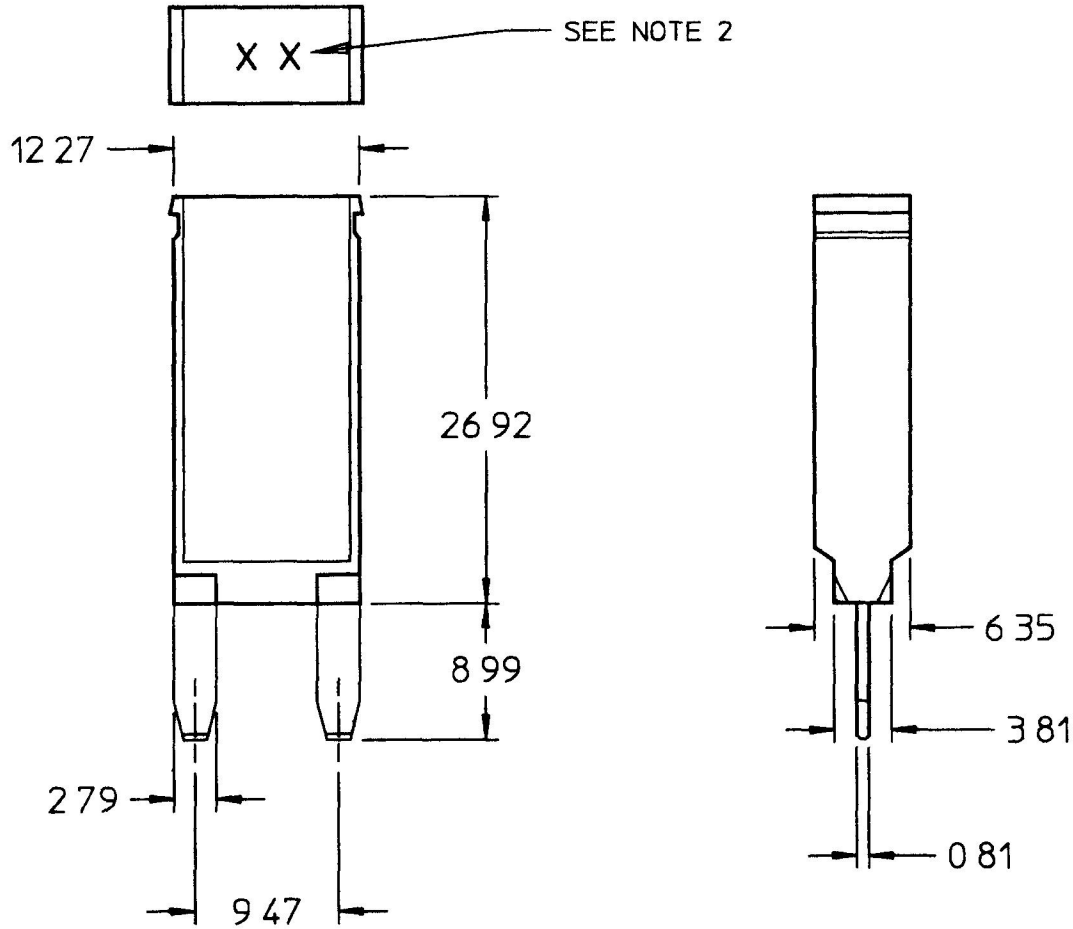

PT NO	AMPS
30418-25	25
30418-20	20
30418-15	15
30418-10	10

NOTES
1 ALL DIMENSIONS REFERENCE ONLY
2 AMP RATING
3 12V CIRCUIT BREAKER

DO NOT SCALE

LET	WAS	DATE	BY	LET	WAS	DATE	BY
				--	ISSUED	7/22/99	GA

MATERIAL	DRAWN	CHK	APVD	SCALE		DATE DRAWN
	AS		GA	2 1		07/09/99
FINISH	Cole Hersee Co. 20 OLD COLONY AVENUE, BOSTON, MA, USA, 02127					DATE BLUEPRINTED
TOLERANCES DECIMAL ± ANGLE ±	CIRCUIT BRKR, TYPE 1					30418

Confidential Property of Cole Hersee