| PART NUMBER | "A" | "B" | "C" | "D" | LEAD "A" COLOR | LEAD "B" COLOR | LEAD "A" SIZE | LEAD "B" SIZE | LEAD "A" STRIP | LEAD "B" STRIP | INSULATION TYPE |
|---|---|---|---|---|---|---|---|---|---|---|---|
| OFHM0003ZXJT-F5 | 70±5 [2.76±0.20] | 165.5±5 [6.52±0.20] | NO STRIP | NO STRIP | BLACK | BLACK | 18 AWG | 18 AWG | N/A | N/A | TXL |

| LTR | DATE | REVISION | CHK | APD |
|---|---|---|---|---|
| A | 28/Jan/16 | 515497GCA - NEW RELEASE FYUE | | |
| B | 18/May/16 | 515902ECA-CANCEL WIRE END STRIP FYUE | | |
| C | 14/Feb/17 | 517136ECC-ADD FUSE ASSEMBLY DIMENSION FYUE | | |

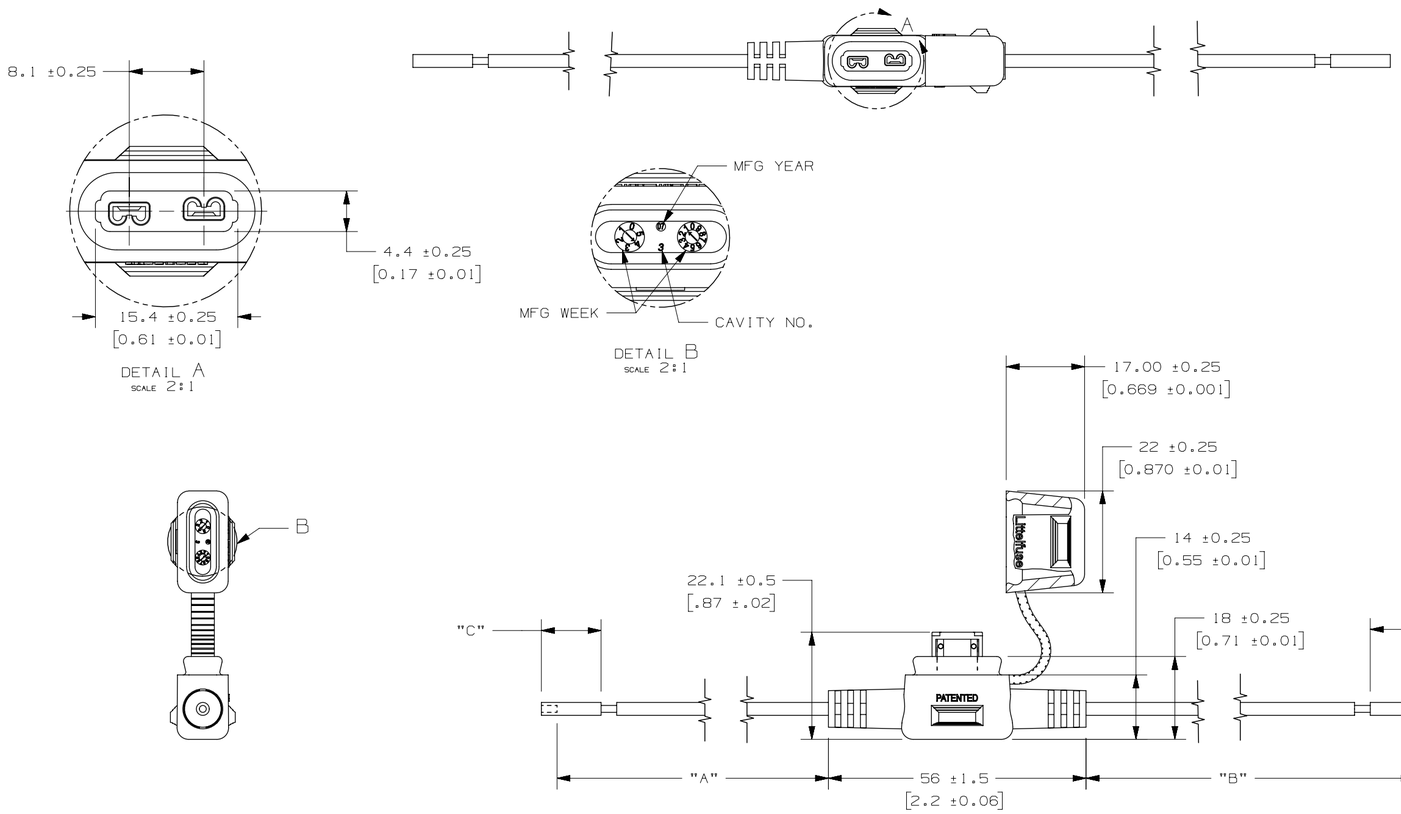


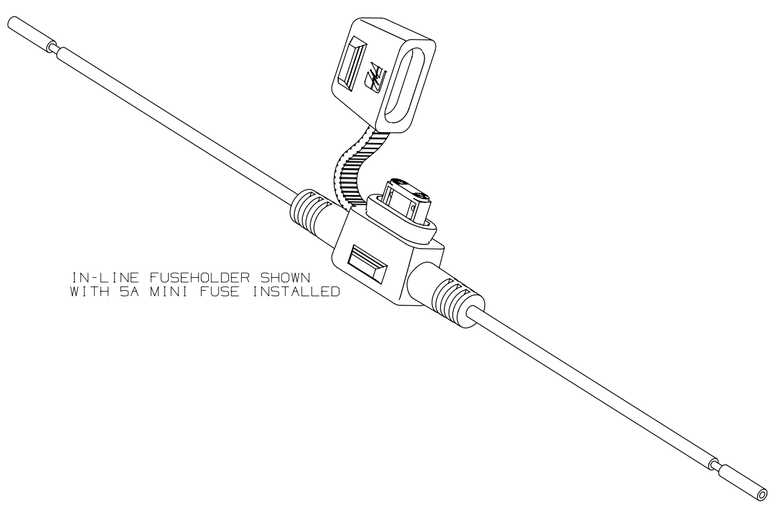


NOTES:
1. HOLDER MATERIAL: BLACK TPV
2. CONTACTS: COPPER ALLOY: TIN-PLATED
3. WIRE: STRANDED COPPER, 125°C RATED, 18AWG TXL WIRE
4. CRIMP: MUST MEET SAE/USCAR 21 STANDARD
5. FUSE RATING: 5A, 32Vdc
6. FUSEHOLDERS SHOULD NOT BE PLACED UNDER TENSION IN FINAL APPLICATION
7. MAX TEMPERATURE 125°C
8. THE HOLDER IS SHIPPED WITH COVER CLOSED

METRIC

UNLESS OTHERWISE SPECIFIED, DIMENSIONS ARE IN MILLIMETERS.
DIMENSIONS IN BRACKETS [ ] ARE INCHES

UNLESS OTHERWISE SPECIFIED, DIMENSIONS DO NOT INCLUDE PLATING.

| | |
|---|---|
| ◎ | DENOTES CRITICAL CHARACTERISTICS. |
| CPK | DENOTES CPK DIMENSIONS, -MINIMUM CPK VALUE |
| ST | DENOTES A CHARACTERISTIC THAT PROVIDES AN INDICATION OF PROCESS PERFORMANCE. PROCEDURE FOR MEASUREMENT AND TRACKING TO BE DEFINED IN LITTELFUSE INSPECTION INSTRUCTIONS |
| CP | DENOTES CP DIMENSIONS, -MINIMUM CP VALUE MUST BE WITHIN THE DIMENSIONAL LIMITATIONS SHOWN ON DRAWING AND INITIALLY LOCATED TO ALLOW FOR MAXIMUM TOOL LIFE |

| COPIES TO | | |
|---|---|---|
| 1 | 9 | 18 |
| 2 | 10 | 19 |
| 3 | 12 | 20 |
| 4 | 13 | 21 |
| 5 | 14 | 23 |
| 6 | 15 | 33 |
| 7 | 16 | 43 |
| 8 | 17 | 53 |

| | | |
|---|---|---|
| MATL SPEC: SEE NOTES | | |
| FINISH: SEE NOTES | | |
| DRW: FYUE | DATE: 28/Jan/16 | SCALE: 1:1 |
| CHK | DATE | SUPER DR |
| APPD | DATE | FINSH GOOD WT GRAMS/PIECE |

TOLERANCE UNLESS OTHERWISE SPECIFIED
ONE PLACE DEC +/-.3
TWO PLACE DEC +/-.15
THREE PLACE DEC +/-.100
ANGULAR +/-1°

3RD ANGLE PROJECTION

TITLE: MINI IN-LINE FUSEHOLDER WITH 5A FUSE

Littelfuse®
DES PLAINES, ILLINOIS 60016

| REVISION | DRWG. NO. | OUTLINE |
|---|---|---|
| C | OFHM0003ZXJT-F5 | |

CAD GENERATED DRAWING - NO PENCIL CHANGES ALLOWED