REVISION		
REV	DATE	DESCRIPTION
A	9/24/18	519882GCP - RELEASE MRY

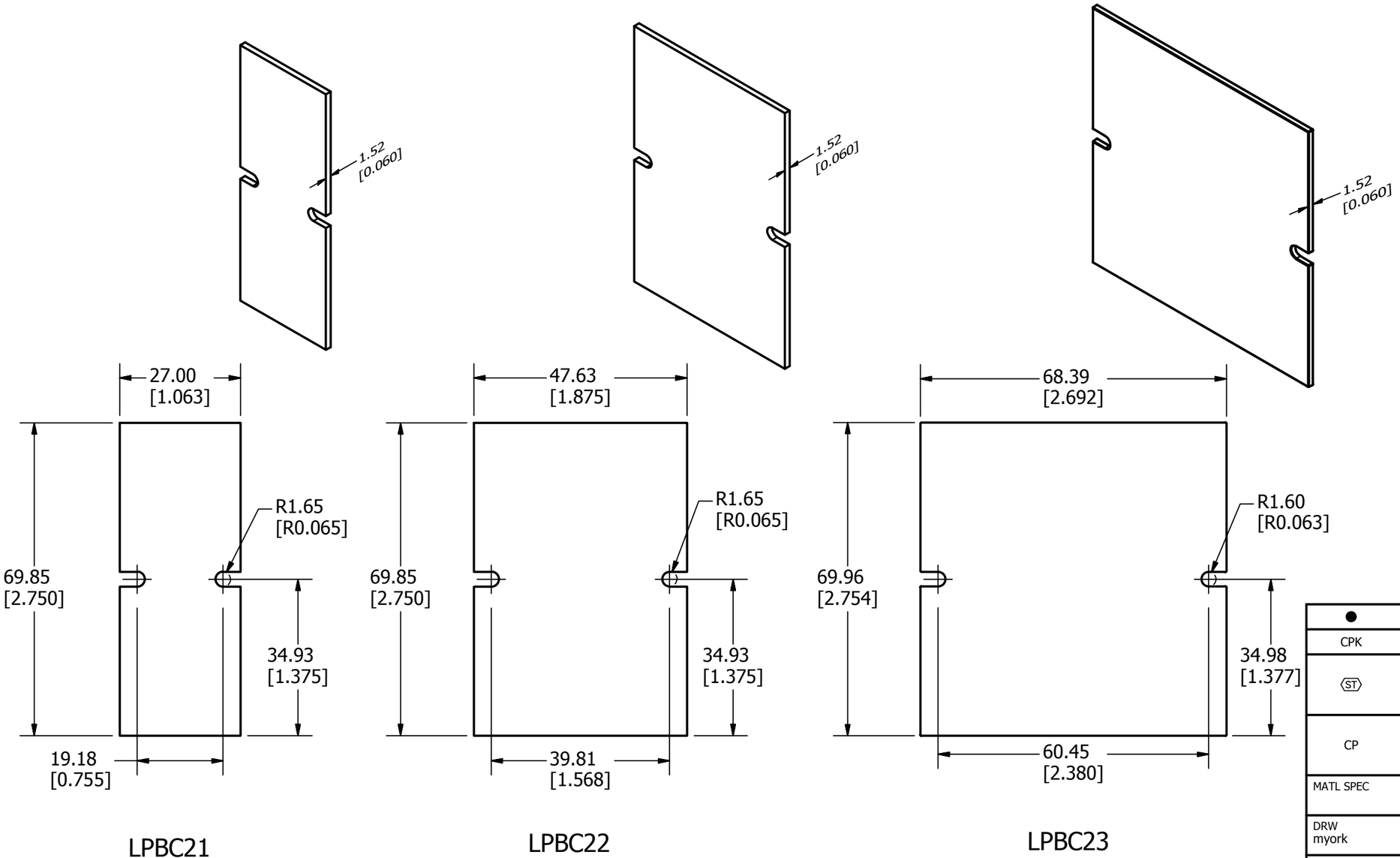

●	DENOTES CRITICAL CHARACTERISTICS.
CPK	DENOTES CPK DIMENSIONS, -MINIMUM CPK VALUE
⟨ST⟩	DENOTES A CHARACTERISTIC THAT PROVIDES AN INDICATION OF PROCESS PERFORMANCE. PROCEDURE FOR MEASUREMENT AND TRACKING TO BE DEFINED IN LITTELFUSE INSPECTION INSTRUCTIONS.
CP	DENOTES CP DIMENSIONS, -MINIMUM CP VALUE MUST BE WITHIN THE DIMENSIONAL LIMITATIONS SHOWN ON DRAWING AND INITIALLY LOCATED TO ALLOW FOR MAXIMUM TOOL LIFE.

B

MATL SPEC		FINISH	
DRW myork	DATE 9/14/2018	SCALE NTS	FINISH GOOD WT GRAMS/PIECE

UNLESS OTHERWISE SPECIFIED, DIMENSIONS ARE IN MILLIMETERS, DIMENSIONS IN BRACKETS [ ] ARE INCHES DIMENSIONING AND DO NOT INCLUDE PLATING. TOLERANCING TO BE INTERPRETED IN ACCORDANCE WITH ANSI Y14.5M-1994

3RD ANGLE PROJECTION

TITLE

LPBC2 SERIES OUTLINE

Littelfuse®
CHICAGO, ILLINOIS 60631

REVISION	DRWG NO.	SHEET 1 OF 1
A	OL-LPBC2	