THIS DRAWING AND THE INFORMATION CONTAINED WITHIN IT ARE CONFIDENTIAL AND MAY NOT BE COPIED OR DISCLOSED WITHOUT THE WRITTEN PERMISSION OF LITTELFUSE.

REVISIONS

REV.	DESCRIPTION	DATE	DESIGNED	APPROVED
A	First issue of outline drawing	20-May-20	L.Dal Molin	M.Tinto

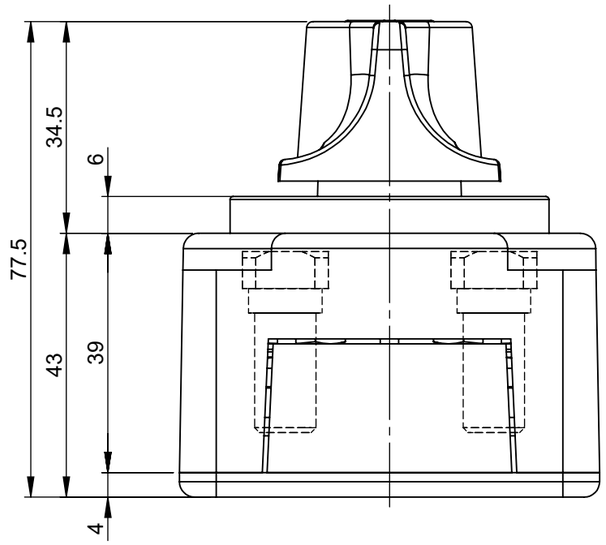

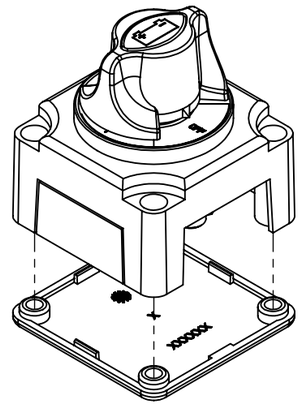

SCALE 1:2

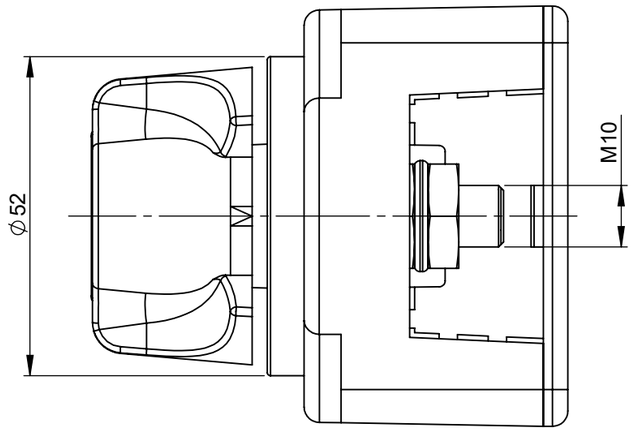

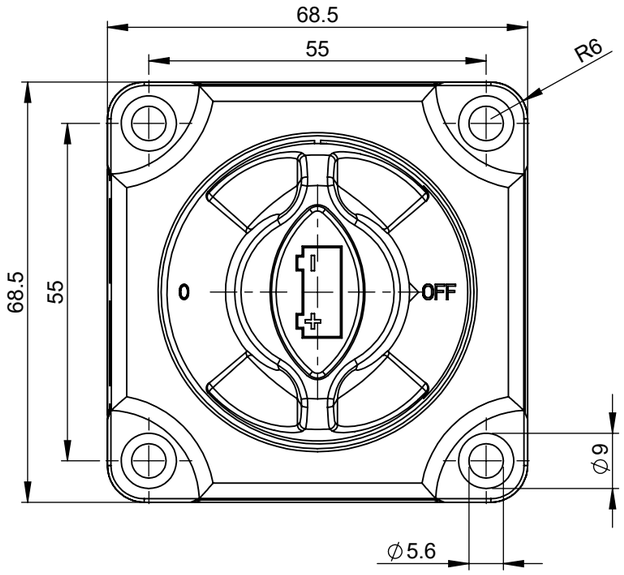

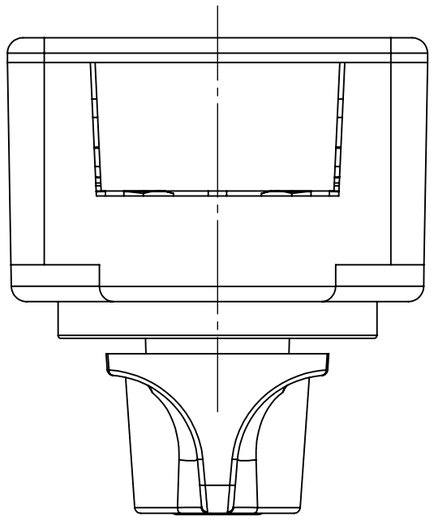

TECHNICAL DATA

-Nominal tension: 24V
-Maximum continuos operating current: 300A
-Highest load 1000A for 5 sec
-Copper contacts M10
-Brass nuts M10

SAP drawing number:

Material and treatments:

DIMENSIONS AND TOLERANCES IN MILLIMETERS, DEFINED ACCORDING TO ISO 1101-2017.

linear dimensions						
0,5 3	>3 6	>6 30	>30 120	>120 400	>400 1000	>1000 2000
±0,2	±0,3	±0,5	±0,8	±1,2	±2	±3

angle (for range of lengths)			
up to 10	>10 50	>50 120	>120 400
±1°30'	±1°	±0°30'	±0°15'

●	FIT/ FUNCTION CRITICAL CHARACTERISTICS SYMBOL
<S>	SAFETY/ COMPLIANCE CRITICAL CHARACTERISTICS SYMBOL
CPK	DENOTES CPK DIMENSIONS MINIMUM CPK VALUE
ST	DENOTES A CHARACTERISTIC THAT PROVIDES AN INDICATION OF PROCESS PERFORMANCE.PROCEDURE FOR MEASUREMENTAND TRACKINGTO BE DEFINED IN LITTELFUSE INSPECTION INSTRUCTIONS
CP	DENOTES CP DIMENSIONS, -MINIMUM CP VALUE MUST BE WITHIN THE DIMENSIONAL LIMITATIONS SHOWN ON DRAWING AND INITIALLY LOCATED TO ALLOW FOR MAXIMUM TOOL LIFE

	NAME	DATE
DRAWN	L. Dal Molin	02-Apr-19
CHECKED	-	-
	-	-
	-	-

FORM NO; CVP-PE40-0013 REV A

FIRST ANGLE PROJECTION

DO NOT SCALE DRAWING

Littelfuse®

Expertise Applied | Answers Delivered

TITLE

MARINE MANUAL BDS 24V (ON/OFF-ON/OFF)

SIZE: A3 | DWG. NO. OUTLINE OL-08080700 | REV. A

SCALE 1:1 | SHEET 1 OF 1