551849

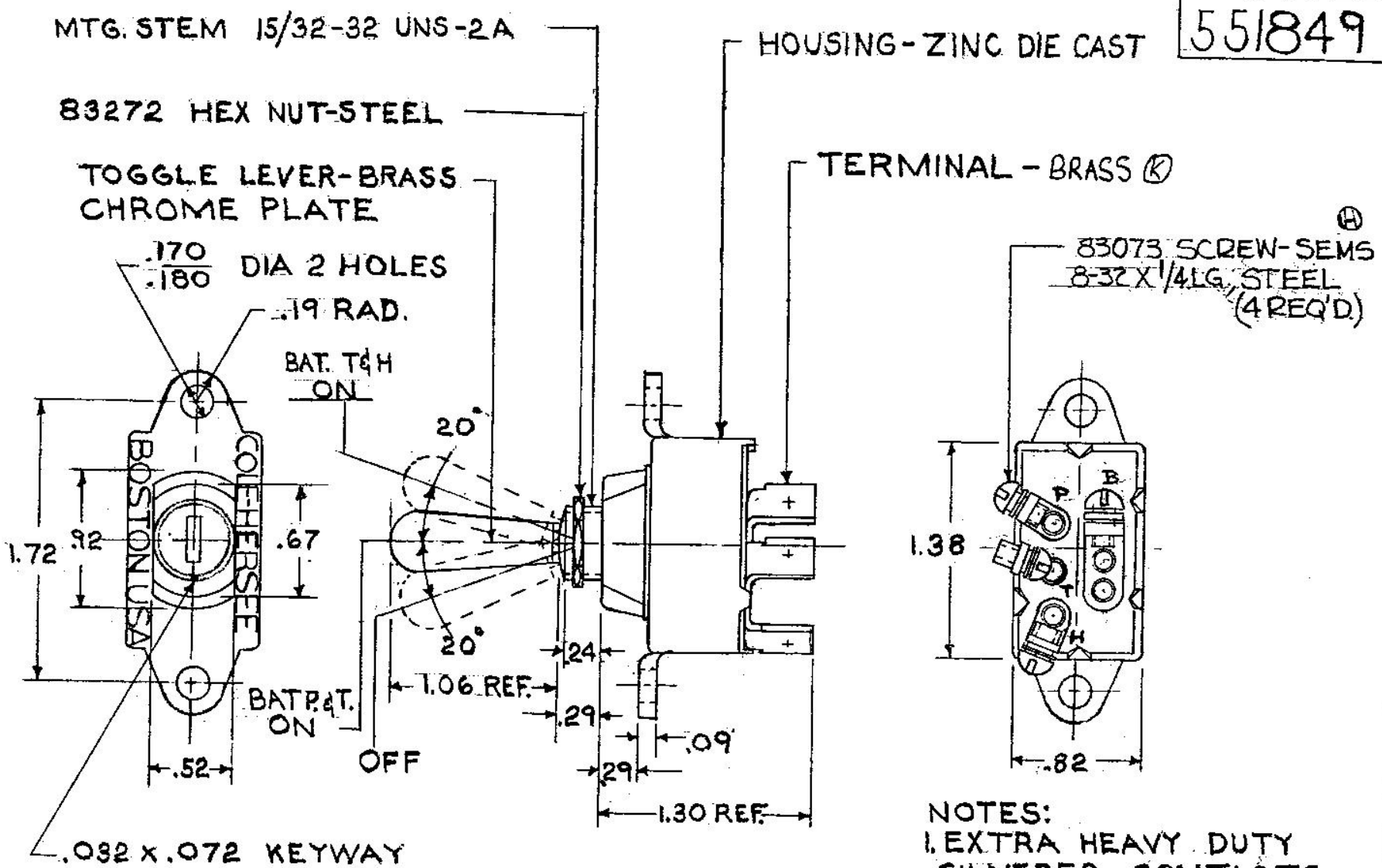

NOTES:
1. EXTRA HEAVY DUTY SILVERED CONTACTS
2. ALL STEEL PARTS (J) PLATED
3. HEX NUT & SCREWS TO (L) BE BAGGED

DO NOT SCALE

LEGEND	
P	PARK LT.
T	TAIL LT.
H	HEAD LT.

Confidential property of Cole Hersee

LET	WAS	DATE	BY	LET	WAS	DATE	BY
				K	STEEL/ECN#26487	9/3/97	JS
				J	CAD OR ZINC/25234	11/19/92	T.H
				H	REV./19288	2-23-76	KG
				G	1208 16978	8-4-70	RW
L	ECN01005	1/16/01	[illegible]	F	NO CHANGE REDRAWN	5.12.70	J.B.

MATERIAL

FINISH

. TOLERANCE UNLESS SPECIFIED 2 DECIMAL ± .010 3 DECIMAL ± .005 ANGULAR ± 2°

DRAWN	CHECKED	APPR'V'D	SCALE	USED ON
SB	V.M.		1=1	

DATE DRAWN: 5-5-65

DATE BLUEPRINT:

COLE-HERSEE COMPANY
BOSTON, MASS. 02127, U.S.A.

NAME: HEADLAMP SWITCH

PART NO. 551849